Focusing Lens for the SSR1 Section of PXIE

Preliminary analysis of main options

Requirements

Main Coil

Number, total	4
Operating temperature, K	2
Current at maximum strength, A	~100
$\int B^2 dL$, T^2m	4.0
Alignment precision, RMS: center position [mm]	±0.5
Alignment precision, RMS: angle [mrad]	±1
Maximum fringe field at the cold cavity walls, mT	< 1
Maximum fringe field in the warm state, μT	5 ??

Minimum beam bore diameter **30 mm**
Maximum allowed longitudinal real estate **170 mm**
Nominal temperature **2 K**

Main concept approaches reviewed:

1. Lens is not mechanically connected to the beam pipe; passive shielding;
2. Lens is mechanically connected to the beam pipe; passive shielding;
3. Lens is mechanically connected to the beam pipe; active shielding.

Correctors

Required strength 0.0025 T-m – 2-9-12

Number, total	8
Number, per solenoid package	2
Current, A	≤50

1 mrad error of solenoid alignment excites betatron oscillations of about 1.5 mm

Design options:

Cooling	Shielding	BPM Integration
LHe vessel	Combined	Lens
Cooling pipe	Active	
Combined	Passive	Beam pipe

Strand

Oxford Instruments, 54/50 NbTi strand at 4.2 K

	B (T)	8	7	6	5	4	3	2	1
Specs – 0.5 mm	Ic (A)	94	134	173	213	252			
Sample1 0.5 mm	Ic (A)	98	151	202	255	308	367	451	621
Sample2 0.5 mm	Ic (A)		154	206	258	310	370	456	646
Modeling 0.5 mm	Ic (A)		126		207				
Specs - 0.4 mm	Ic (A)		86	113	140	167	194		
Modeling 0.4 mm	Ic (A)		81	108	134	164			

Lens is not mechanically connected to the beam pipe; passive shielding

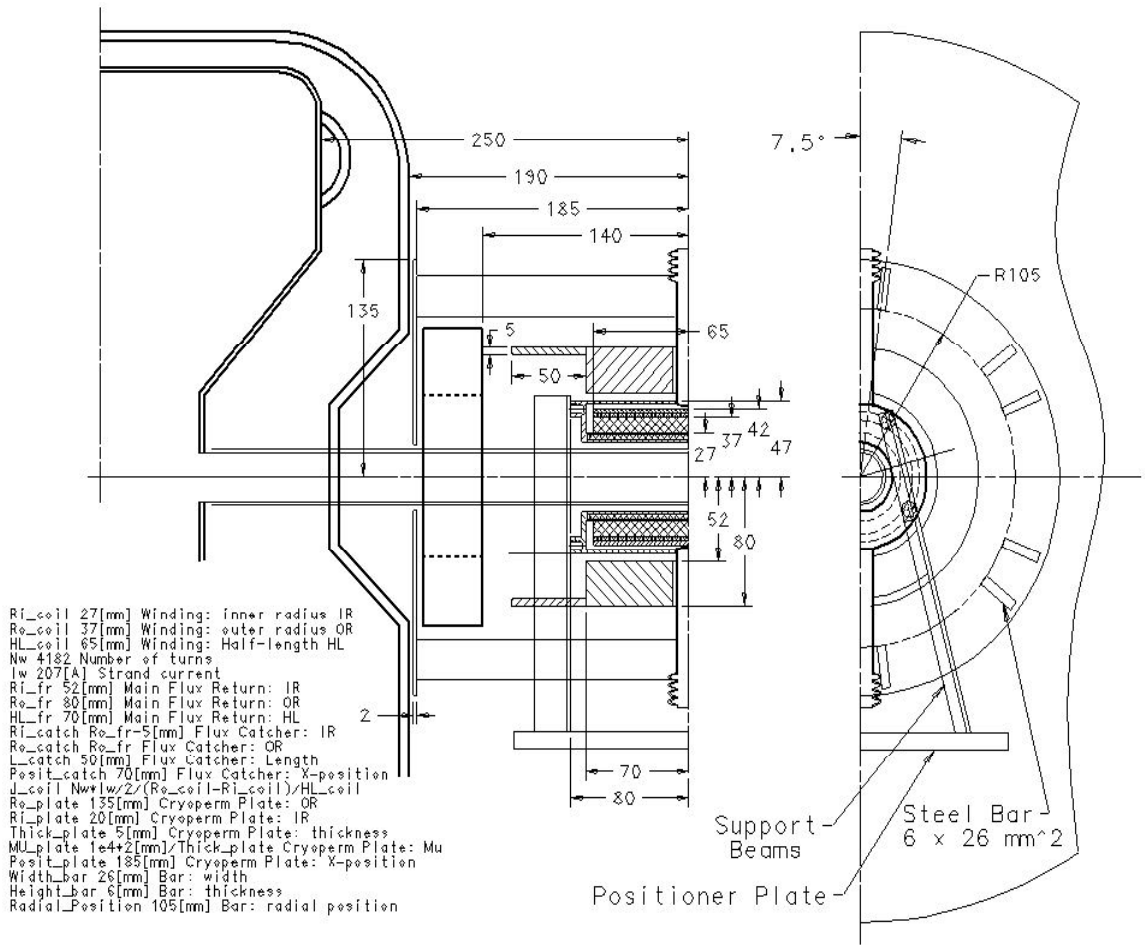

Design Principles

1. Two layer shielding
2. LHe vessel with small diameter filling pipes or pure conduction cooling

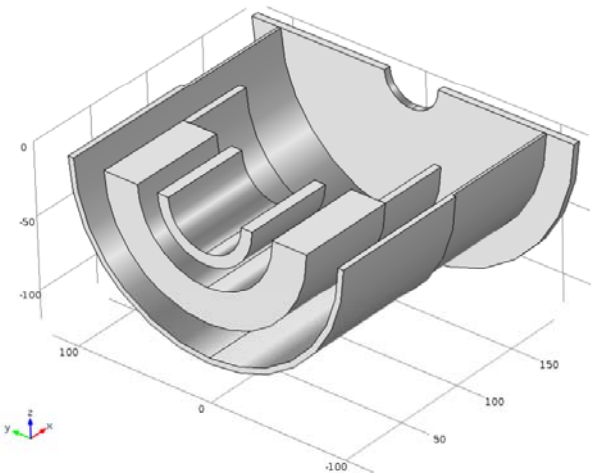

Lens is not mechanically connected to the beam pipe; passive shielding

List of parameters (preliminary):

Coil :

Ri = 27 mm,

Ro = 37 mm,

L = 130 mm,

Strand diameter (Oxford 54 x 6) is 0.4 mm,

N = 6535

Compaction factor is 0.65

Coolant temperature – 2 K

Icr = 133 A

Bcr = 7.7 T

$\int B^2 dl = 6.6\ T^2 \cdot m$ with the flux return.

Primary flux return:

Ri = 50 mm

Ro = 80 mm

L = 140 mm

Flux catcher length = 50 mm

Flux catcher thickness = 5 mm

Secondary flux return:

Cryoperm10 plate thickness – 2 mm

Cryoperm10 plate outer radius – 135 mm

Lens is mechanically connected to the beam pipe; passive shielding: 2K

Coil :

Ri = 22.5 mm,

Ro = 29 mm,

L = 112.5 mm,

Strand diameter is 0.4 mm,

N = 3797

Compaction factor is 0.65

Icr = 168 A

Bcr = 6.6 T

$\int B^2 dl$ = 4.5 $T^2 \cdot m$ with the flux return

Primary flux return:

Ri = 31 mm

Ro = 56 mm

L = 150 mm

Secondary flux return:

Cryoperm10 plate thickness – 2 mm

Cryoperm10 plate outer radius – 135 mm

Cryoperm10 plate position – 185 mm

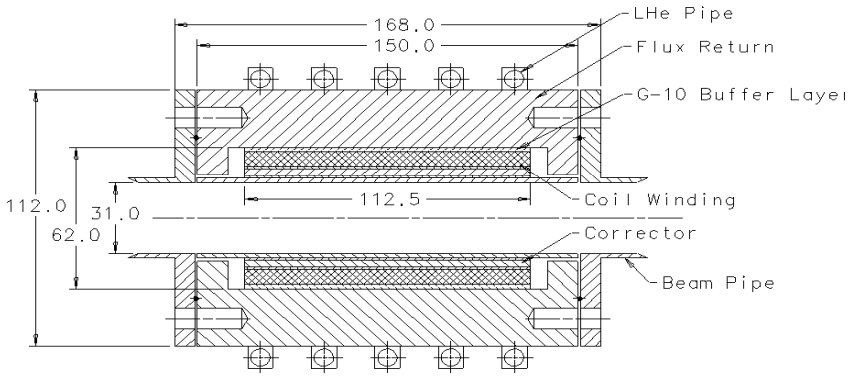

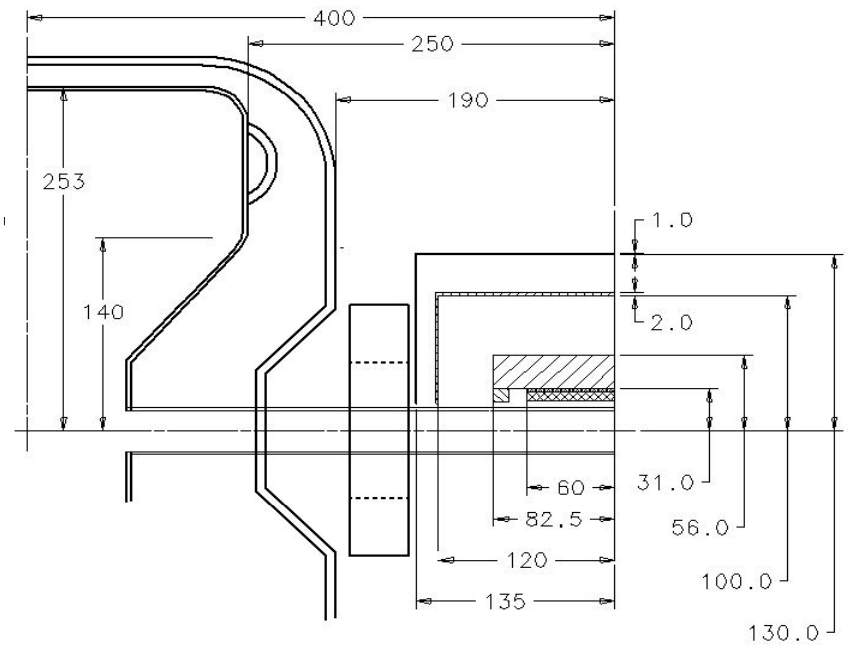

Lens is mechanically connected to the beam pipe; passive shielding: 2K

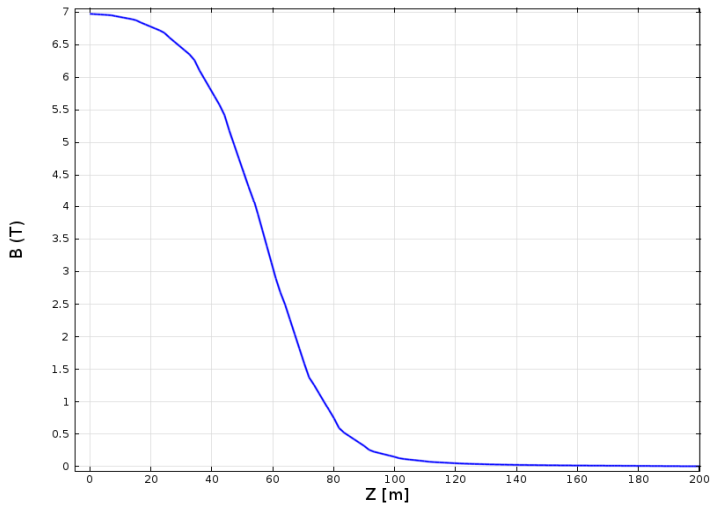

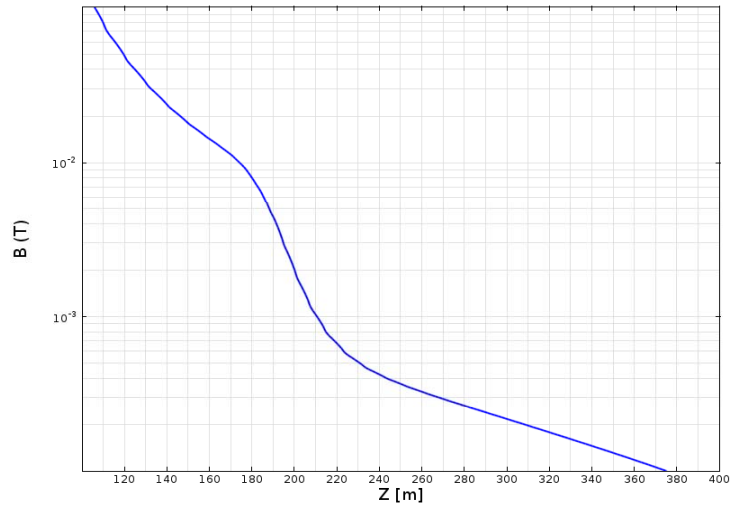

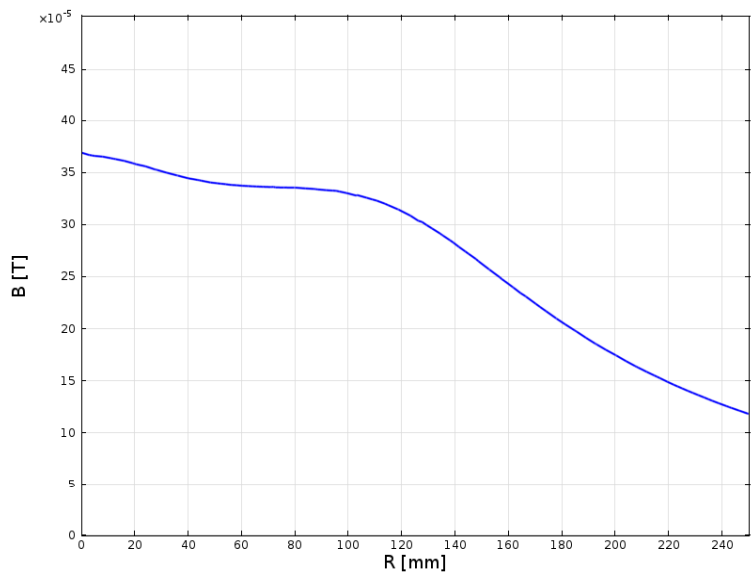

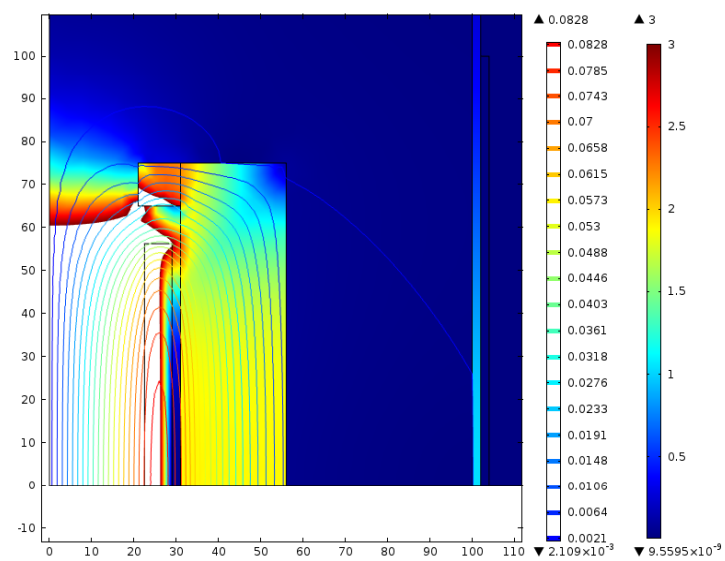

Lens is mechanically connected to the beam pipe; passive shielding: 2.5 K

The need to use this temperature is due to some uncertainty of the inbound heat flux in a case of pure conduction cooling, and strand parameters at T < 4.2 K

Magnetic field in the plane Z = 250 mm

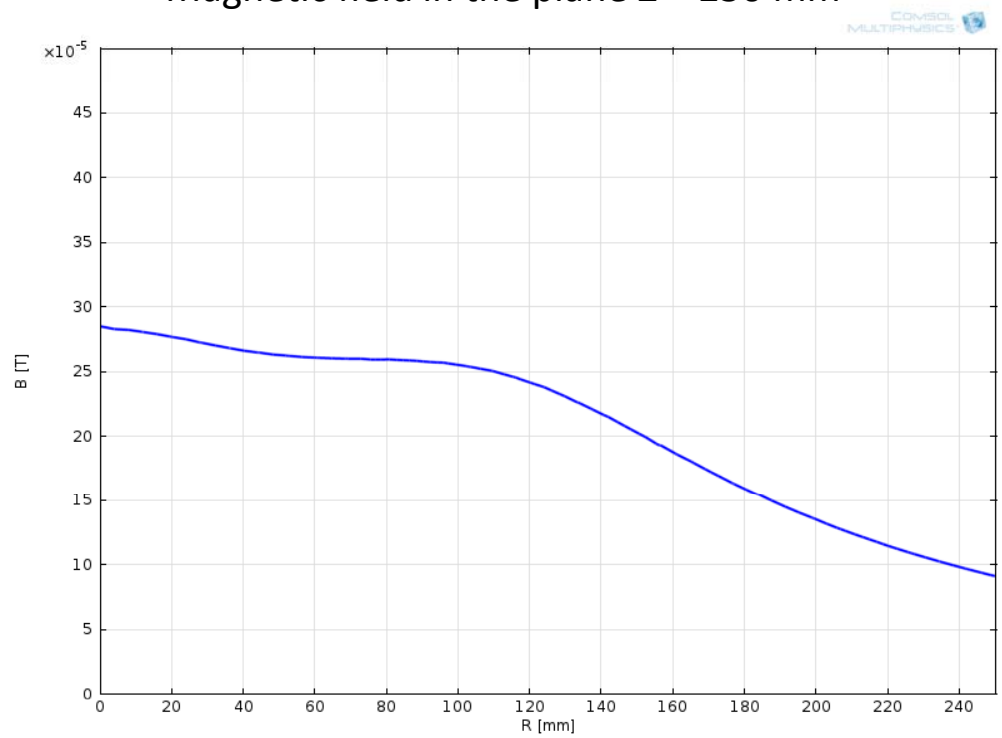

<u>Coil :</u>

Ri = 22.5 mm,

Ro = 29 mm,

L = 120 mm,

Strand diameter is 0.4 mm,

N = 3800

Compaction factor is 0.65

Icr = 160.2 A

Bcr = 6.3 T

$\int B^2 dl = 4.4\ T^2 \cdot m$ with the flux return

Residual Field due to the presence of magnetic materials

For soft steel (SMS Electric Steel, 0.005 C, and 0.005 N max), after it is brought to saturation at Bm = ~2 T:
Hc = 1 Oe
Br = 12000 Gs

For the Cryoperm-10 material,
With H = 0.1 A/cm, Bm = 0.8 T
Br = 0.55 T
Hc = 0.012 A/cm = 1.2 A/m → 0.015 Oe.

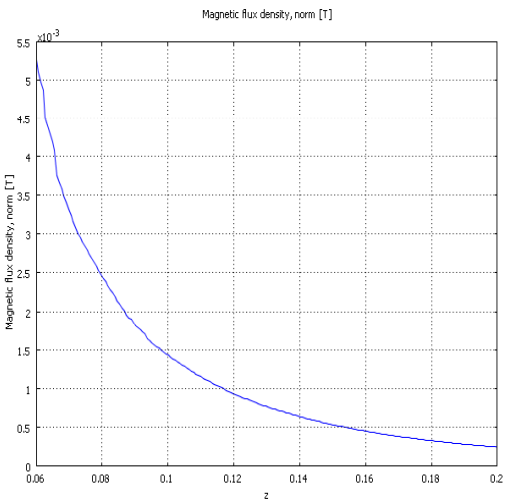

Only the flux return is magnetized;
no additional shield

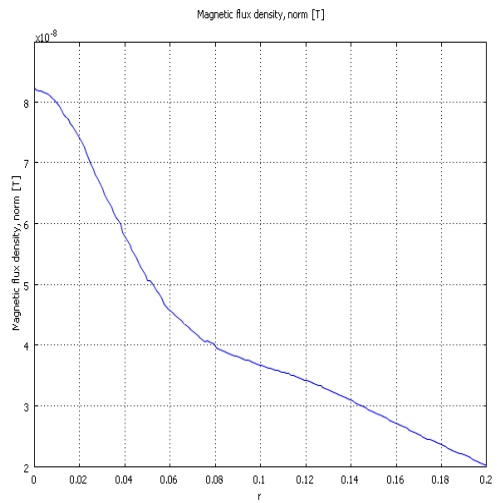

No magnetization in the magnetic shield

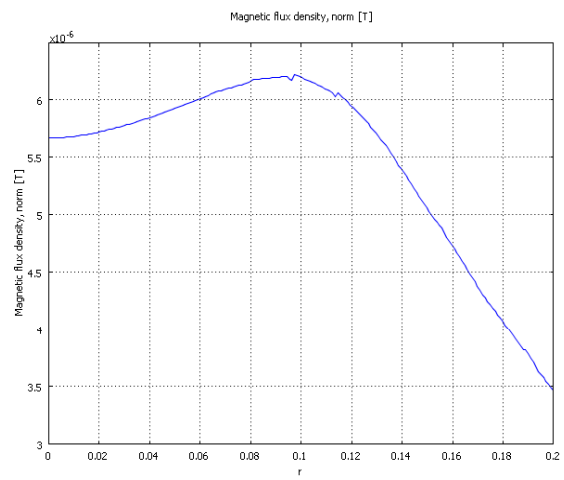

Only the magnetic shield is magnetized

Additional shield is needed to ensure low field in warm state

Magnetic Materials: Relevant Properties

$$\int \boldsymbol{H} \cdot d\boldsymbol{l} = 0$$

$$B = B_R + \mu_{eff} \cdot \mu 0 \cdot H$$

$$\mu_{eff} \cdot \mu 0 = B_R / H_C$$

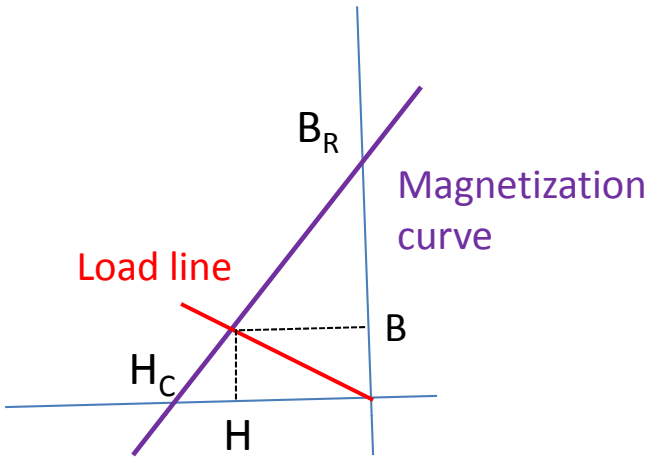

Marerial	B_R	H_C
SMS steel	13,000 G	0.6 Oe
Silicon steel	11,000 G	0.5 Oe
1010	12,000 G	1 Oe
Permalloy 78% Ni	5,000 G	0.05 Oe
Cryoperm-10	5,000 G	0.1 Oe

Choise of Magnetic Shield Material

Flux return: low carbon structural steel; stress-relief annealing

Primary magnetic shield– electric grade silicon steel

Secondary (cleaning) magnetic shield – Cryoperm 10

Residual magnetic field on the surface R = 250 mm after warming up is less than 1 μT even if low quality carbon steel is used as material for the main flux return (H_C = 2 Oe)

Size of the hole for the beam pipe is not a critical parameter:

Hole diameter	R = 0	R = 200 mm	Z = 250 mm	Z = 400 mm
40 mm	3.4 μT	1.2 μT	0.8 μT	0.45 μT
50 mm	4.0 μT	1.2 μT	0.87 μT	0.45 μT
60 mm	4.8 μT	1.3 μT	0.9 μT	0.48 μT
70 mm	5.5 μT	1.3 μT	0.93 μT	0.5 μT

Active Shield Lens

ANL Lens

-Wire: NbTi,
- Operating temperature: 1.8-4.6 K,
- Magnetic field integral: $\int Bz\,dz$ = 0.75 T-m,
- Operating current: ~79 amps,
- Inductance: 1.1 Henries,
- Shielding: B<100G: z >= 15cm,
- Steering coils: 0.2 T, 30 T-mm,
- Bore diameter: 35 mm.

Residual field requirement (warm) – 3 µT

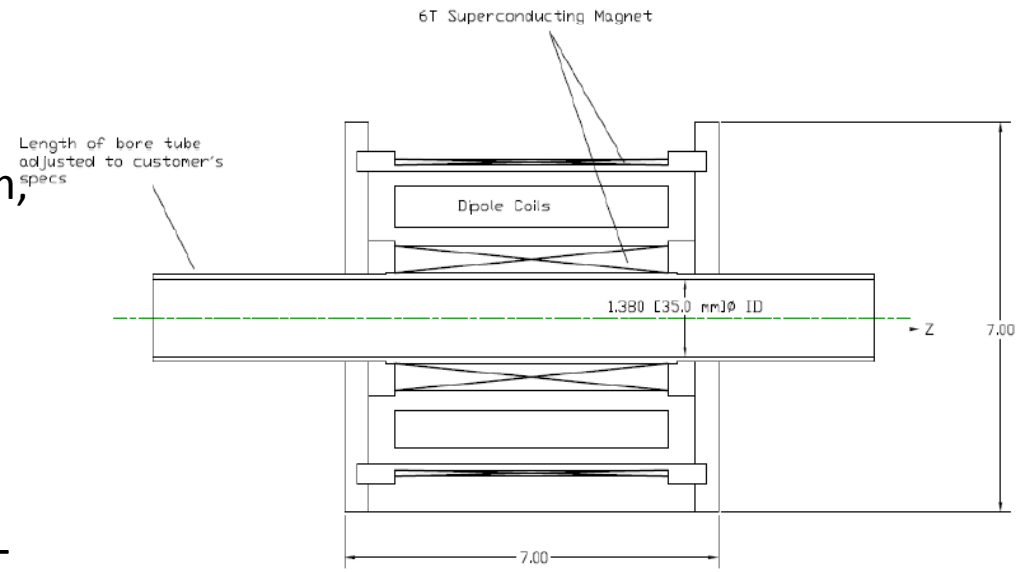

Wall field – less than 40 G

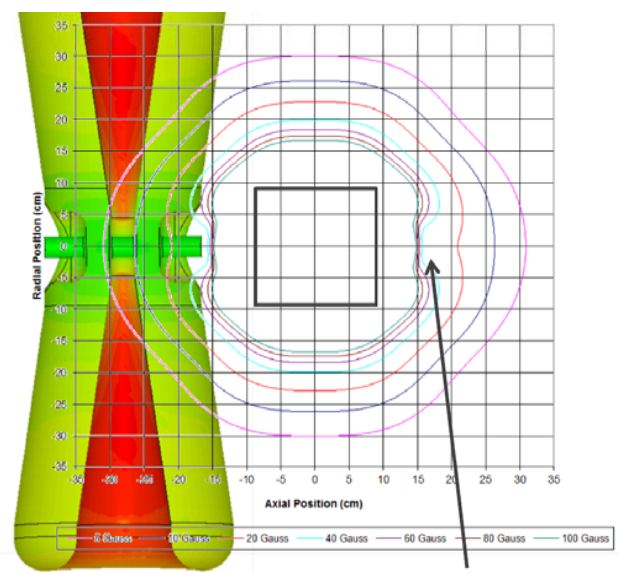

Active Shield Lens

ANL Lens in the SSR1 cryomodule (after some optimization):

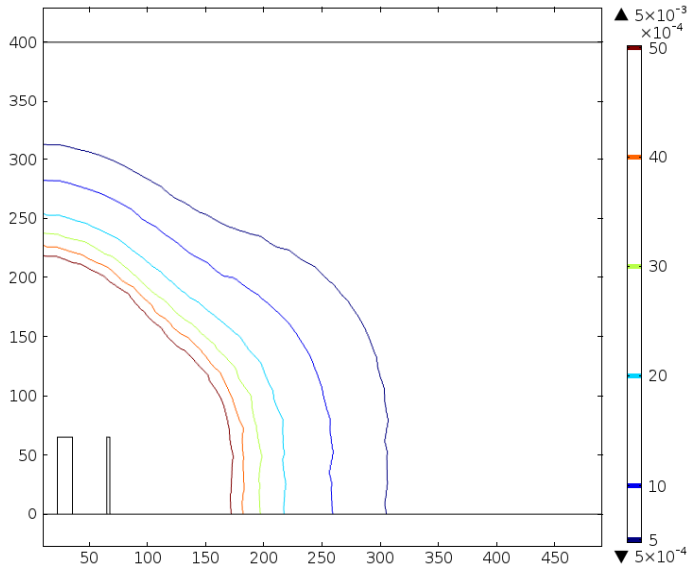

Round 0.35 mm NbTi strand is used to wind both coils,
Coil length - 130 mm,
Inner radius of the main coil – 22.5 mm,
Outer radius of the main coil –35.5 mm,
Compaction factor in the main coil – 0.65,
Number of turns in the main coil – 11418
Inner radius of the flux return coil – 65 mm,
Outer radius of the flux return coil –.67.5 mm,
Compaction factor in the flux return coil – 0.65,
Number of turns in the flux return coil – 2283,
Current - 75 A.
Focusing strength – 4.35 T^2m
Field integral – 0.86 T-m

Wall field less than 10 G (R = 100 mm)
Outer border field less than 3 G

Active Shield in SSR1 Cryomodule

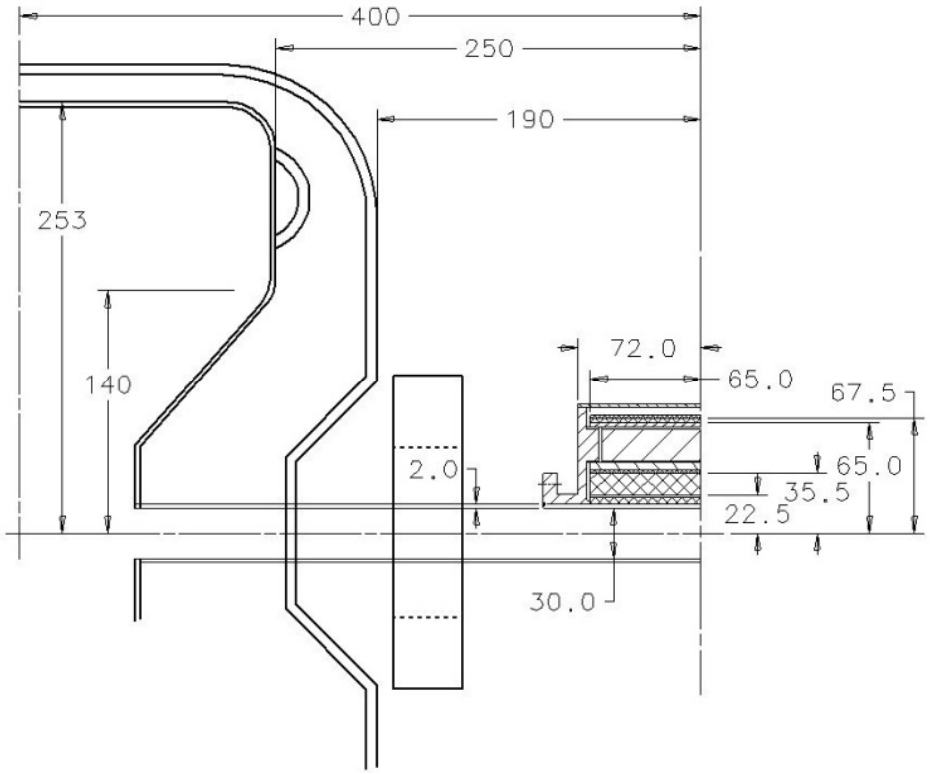

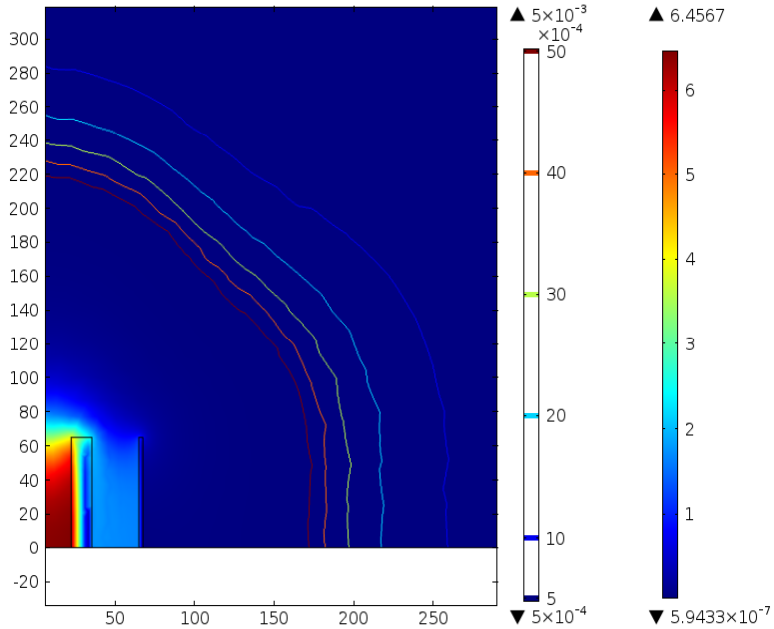

Summary
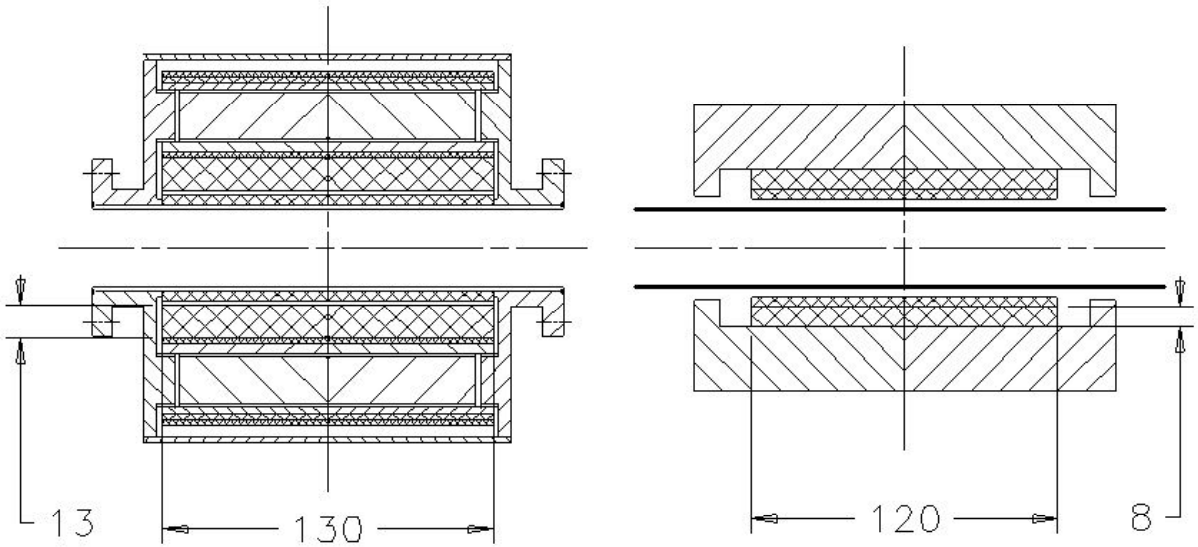
1. All the versions are doable;
2. Options with passive shielding seem simpler in implementation;
3. Fringe field requirements still needs to be understood;
4. Alignment precision and reproducibility needs to be studied; options with passive shielding provide more options (e.g. conduction cooling plus separate beam pipe);
5. Design study should start, so that prototypes are built and tested at 2K in the SSR1 test cryostat (conditions close to what to expect in the SSR1 cryomodule).