SSR1 Cryomodule Development for PXIE Alignment and Cryogenics Status

T. Nicol

January 17, 2012

Requirements from the functional requirements specification

Cavities		
	Number, total	8
	Frequency, MHz	325
	b	0.22
	Operating temperature, K	2
	Operating mode	CW
	Operating energy gain at b=0.22, MV/cavity	2
	Transverse cavity alignment, mm RMS	<±1
	Angular alignment, mrad RMS	≤±10
	Coupler type – standard coaxial with impedance, W	50
	Coupler power rating, KW	>20
Solenoids		
	Number, total	4
	Operating temperature, K	2
	Current at maximum strength, A	≤100
	$\int B^2 dL$, T^2m	6.2
	Max. alignment error (center position), mm RMS	±0.5
	Max alignment error (angle) mrad	±1
	Maximum fringe field at the cavity walls, mT	10
	Each solenoid has independent powering	

WPM in ILC 1.3 GHz cryomodule

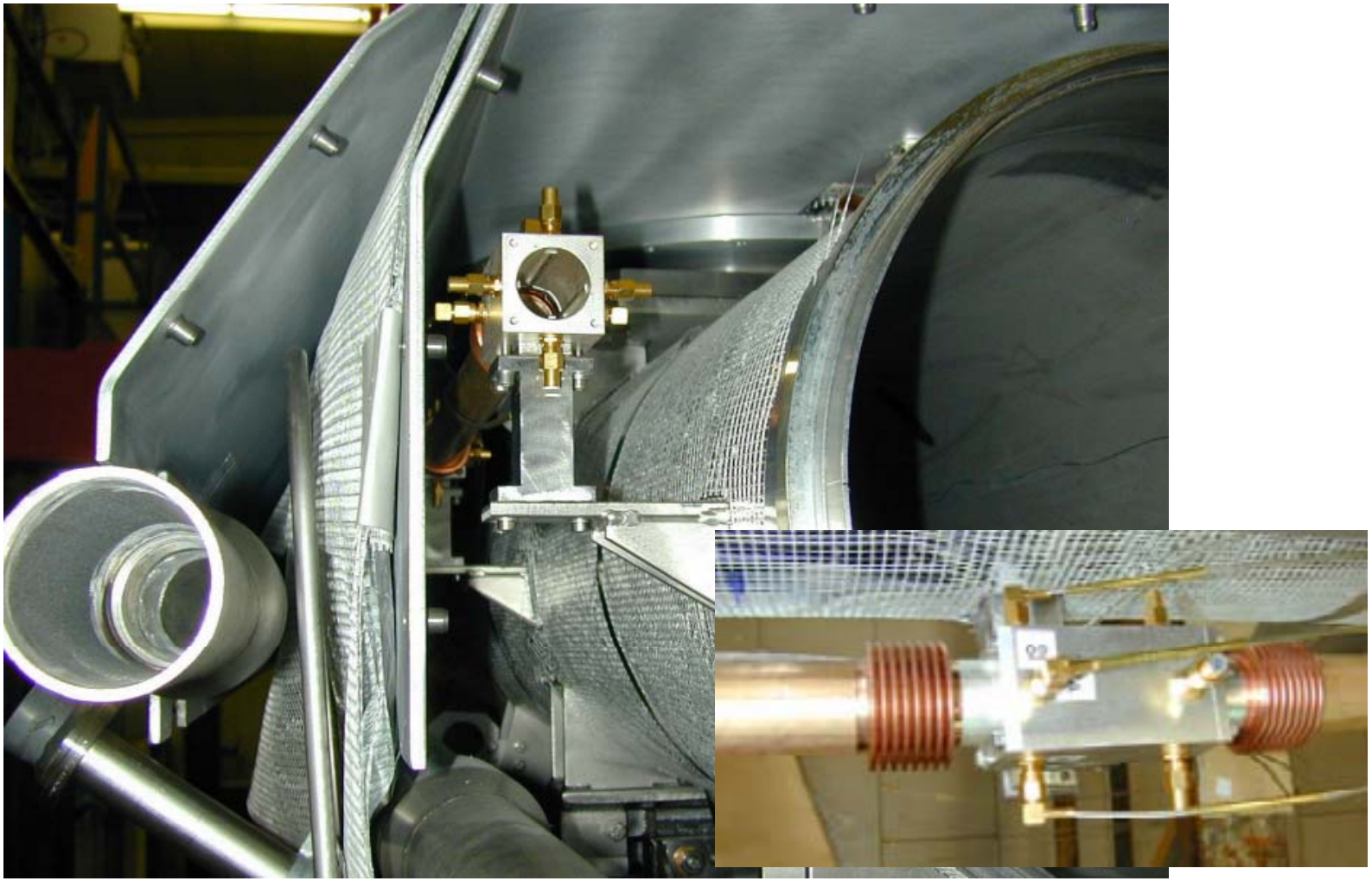

Commercial system
www.on-trak.com

- Design
  - Pellicle beam splitters
  - Position sensitive photodiode
- Advantages
  - Proven commercially available system
  - Range up to 300 m
  - Resolution down to 2 μm possible
- Disadvantages
  - Active electronics in cryomodules
- Results
  - Pellicle beam splitter failed at LN_2 temperature

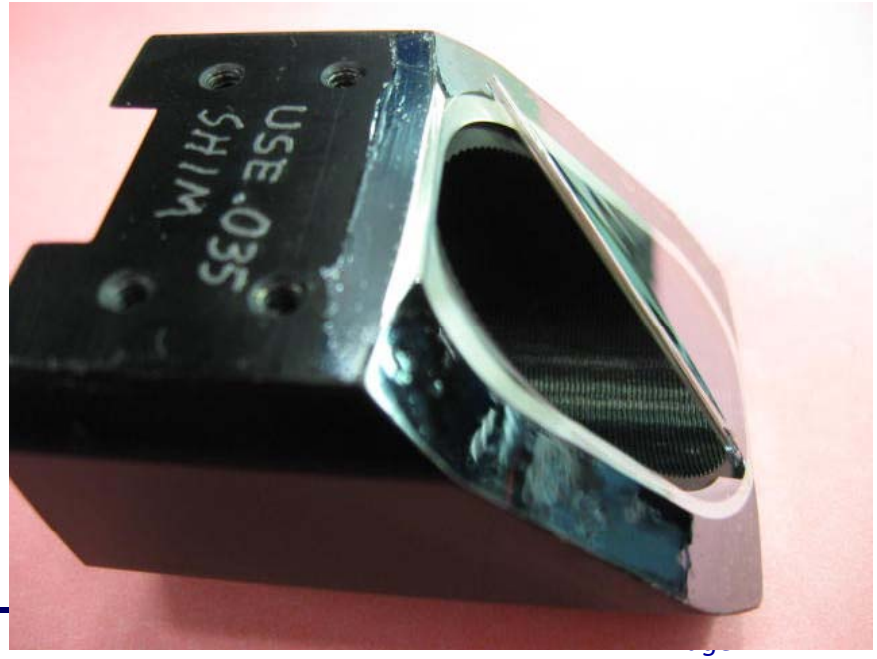

Second prototype

- Design
  - Wire cross-hair target
  - Diffraction pattern used to identify beam center
- Advantages
  - No active components
  - Radiation hard
- Disadvantages
  - Beam center determination at long range?
  - Interference between multiple targets
- Results
  - Excellent resolution and linearity over 1.5 m baseline (σ<6 μm)
  - Uncertainties in scale

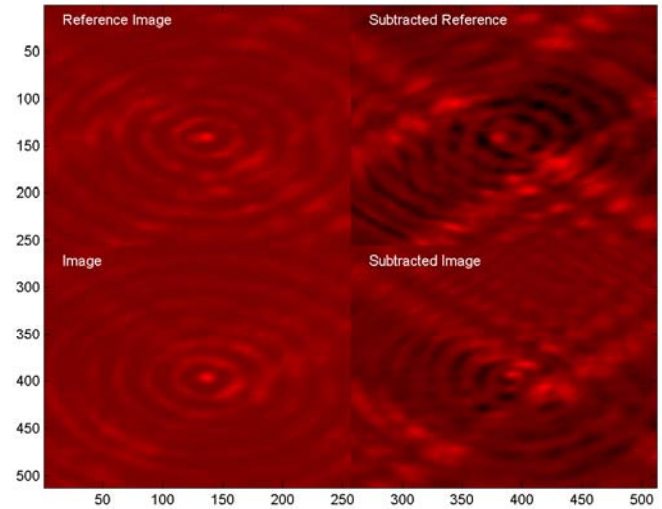

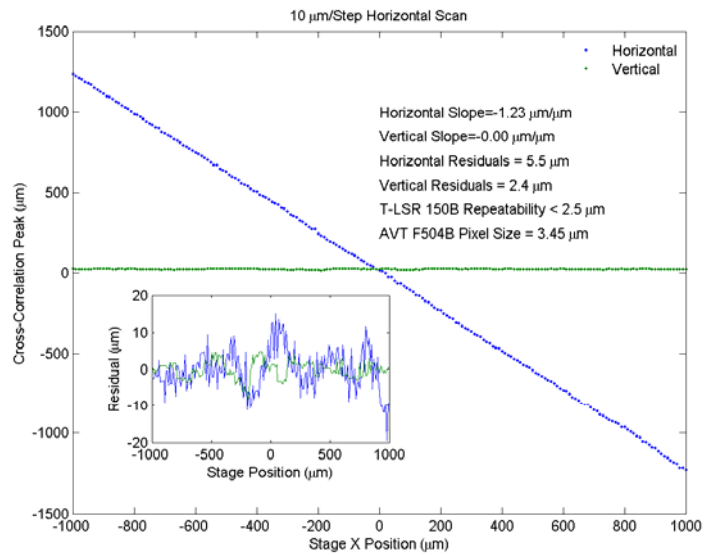

Second prototype

- Long term stability and target motion tracking
  - 8 m baseline
  - 7 targets
  - 2” aperture
  - Monitor temperature and humidity
- Optical alignment possible with
  - 20 um resolution and linearity
  - baselines of 8m or more

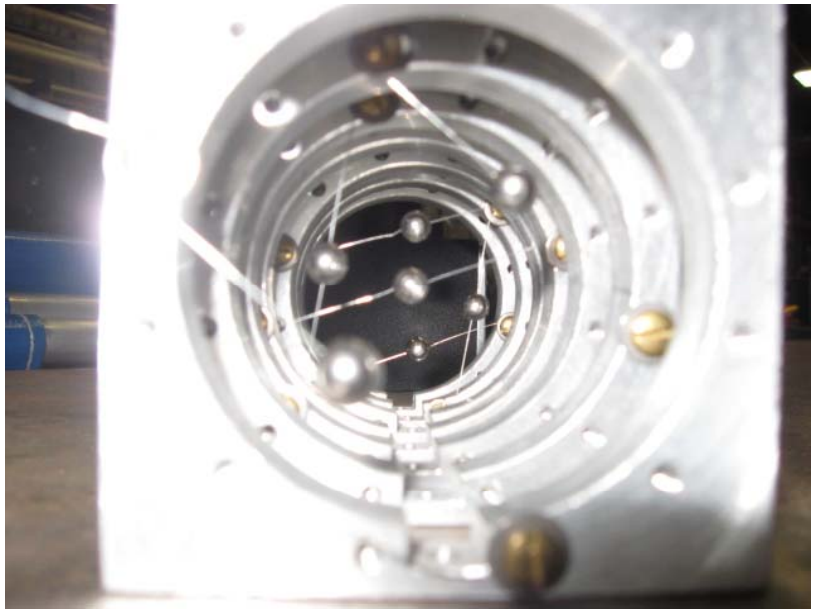

Wire grid

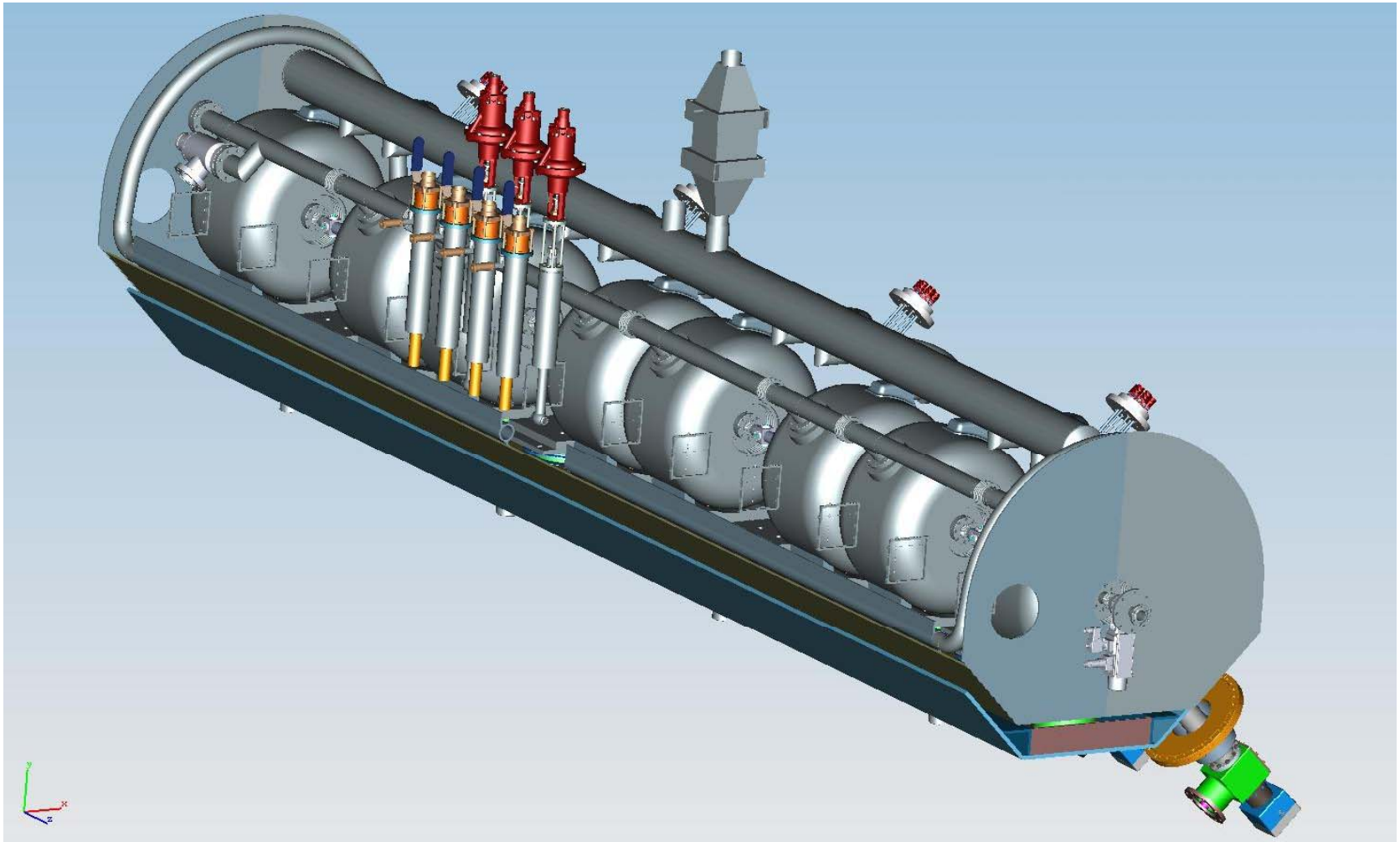

Wire grid

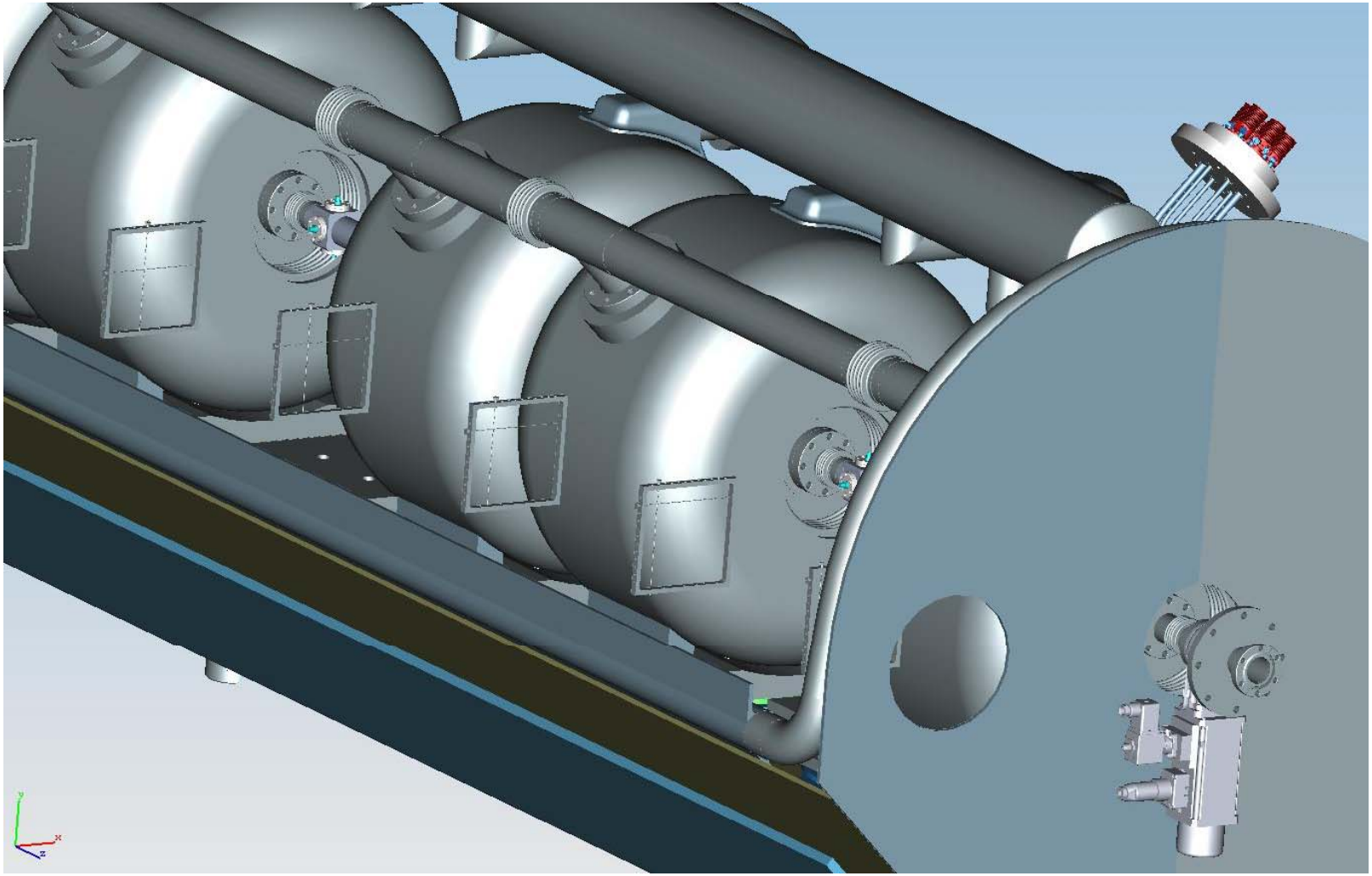

Wire grid

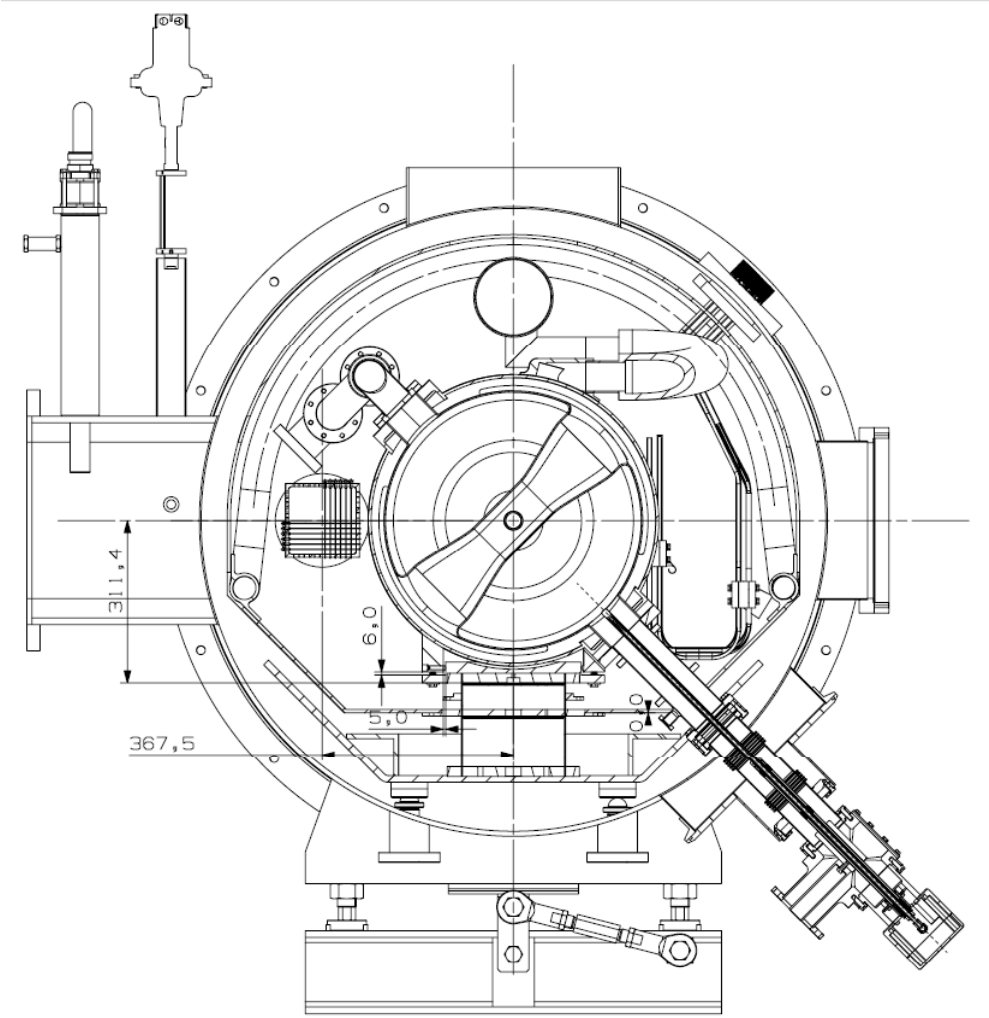

Cryomodule assembly concept

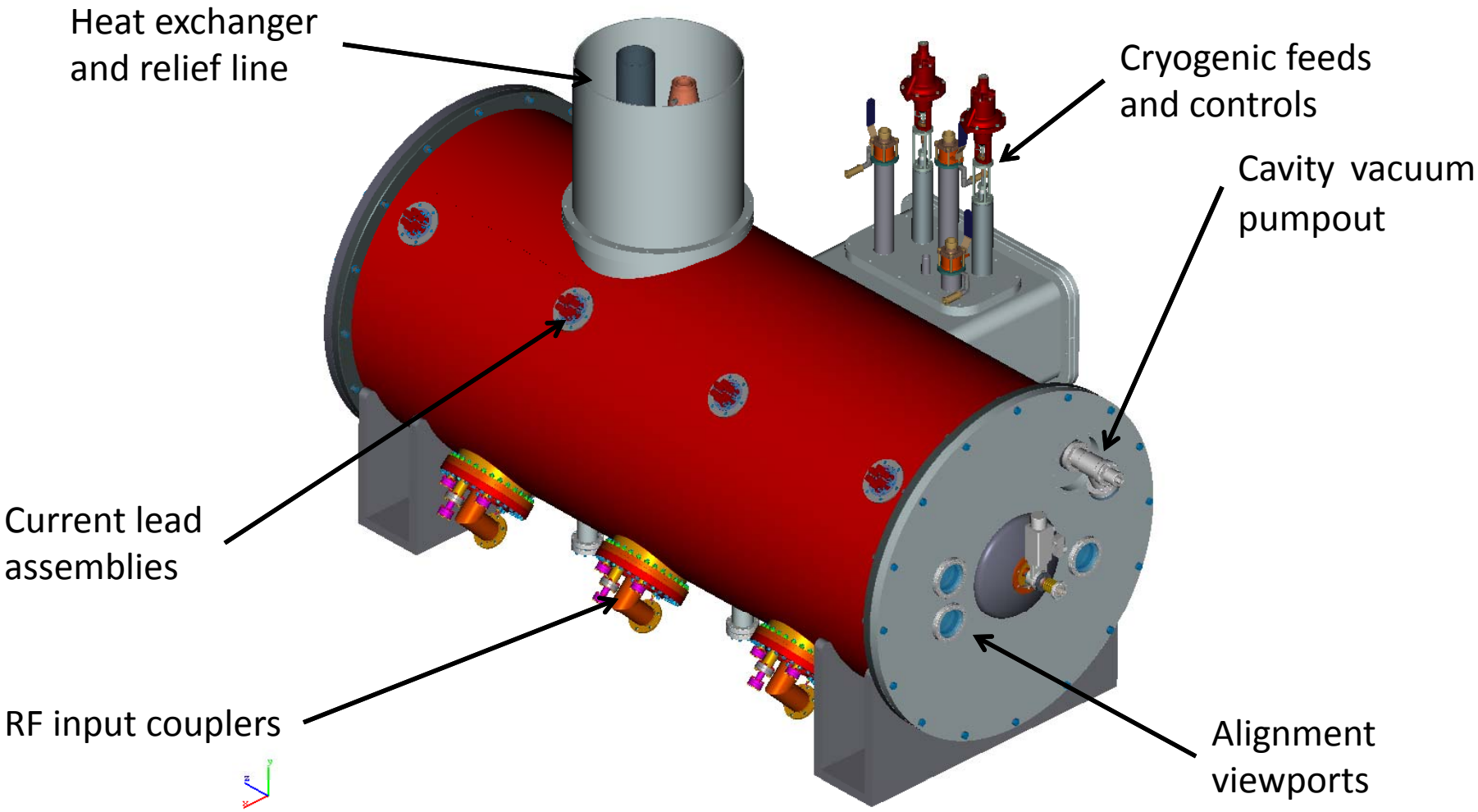

Cryogenics

HW and SSR1 cryomodule flow schematics

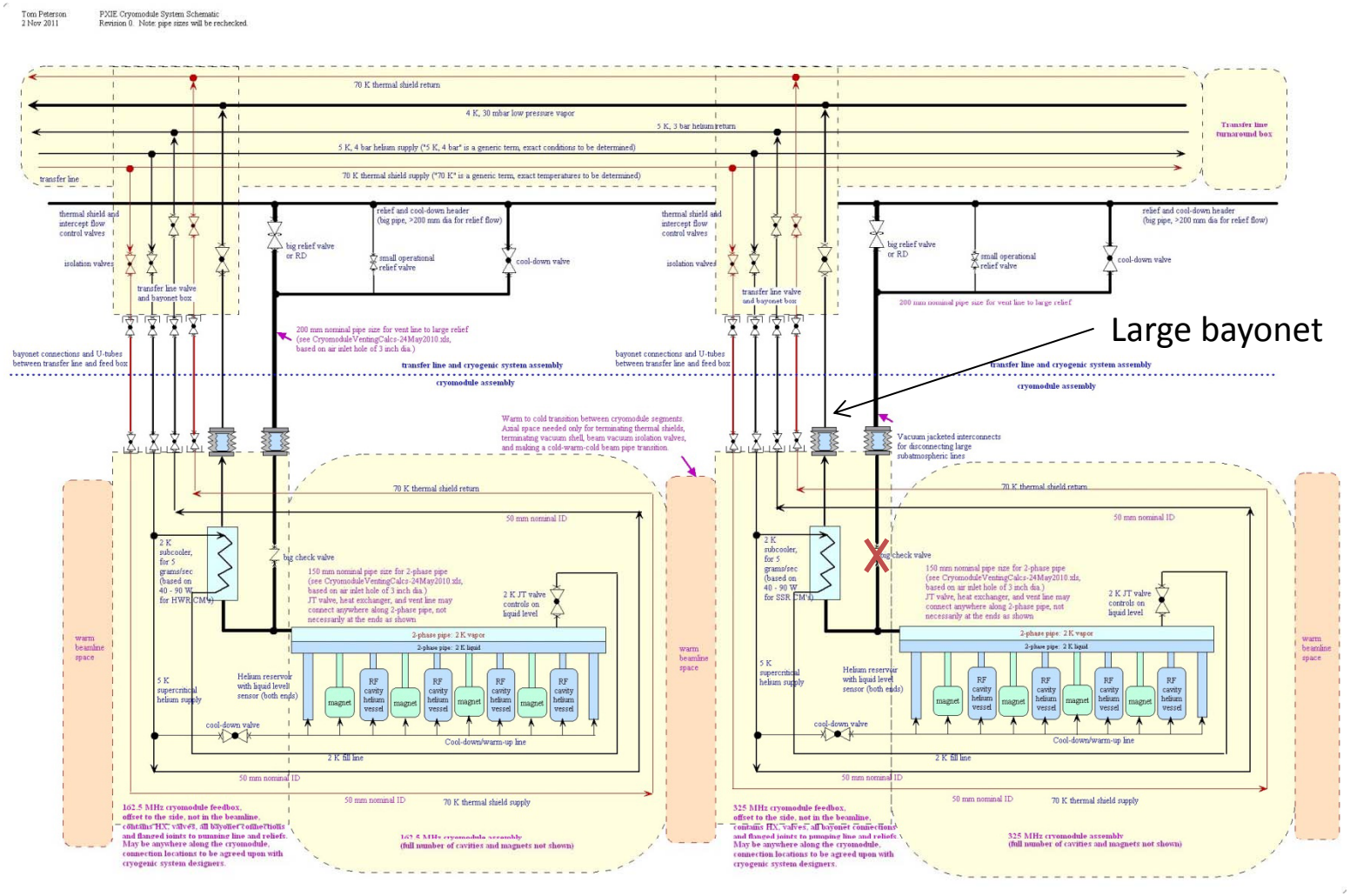

SSR1 cryomodule flow schematic

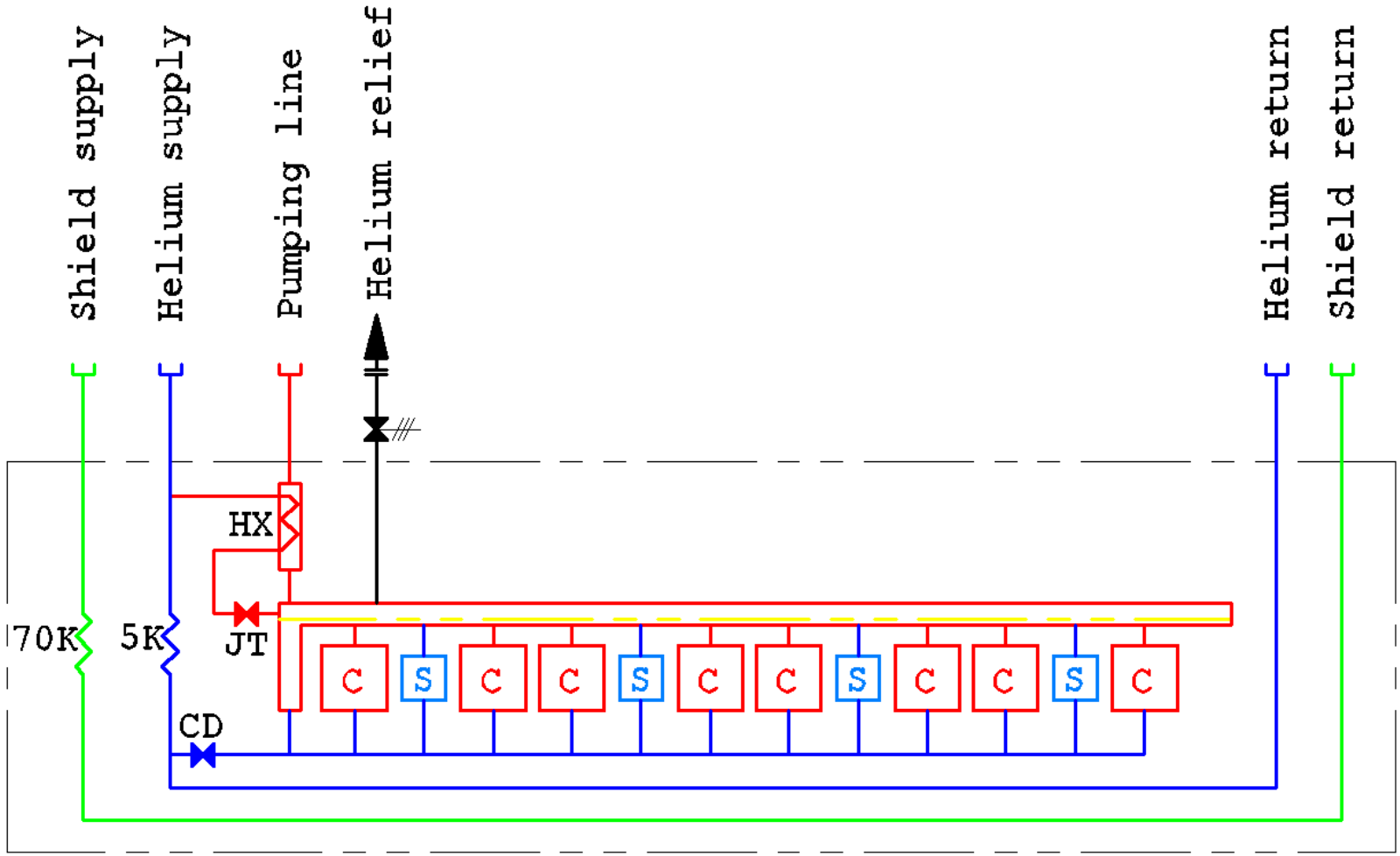

SSR1 heat load estimates

SSR1 Cryomodule Heat Load Estimates

T. Nicol -September 26, 2011

SSR1	Each unit			Mult	Total		
8 cavities, 4 solenoids	80 K	4.5 K	2 K		70 K	4.5 K	2 K
Input coupler static	2.37	0.66	0.01	8	18.96	5.28	0.08
Input coupler dynamic	0.00	0.00	0.25	8	0.00	0.00	2.00
Cavity dynamic load	0.00	0.00	0.80	8	0.00	0.00	6.40
Support post	2.76	0.36	0.05	12	33.12	4.32	0.60
Conduction lead assembly	36.80	13.20	1.24	4	147.20	52.80	4.96
MLI (total 70 K + 2 K)	30.54	0.00	1.42	1	30.54	0.00	1.42
Cold to warm transition	0.72	0.08	0.01	2	1.44	0.16	0.02
Total					**231.3**	**62.6**	**15.5**

Notes:

1. Cavity dynamic loads from N. Solyak.
2. Current lead heat loads assume 2 coils at 50 A, 1 coil at 200 A.
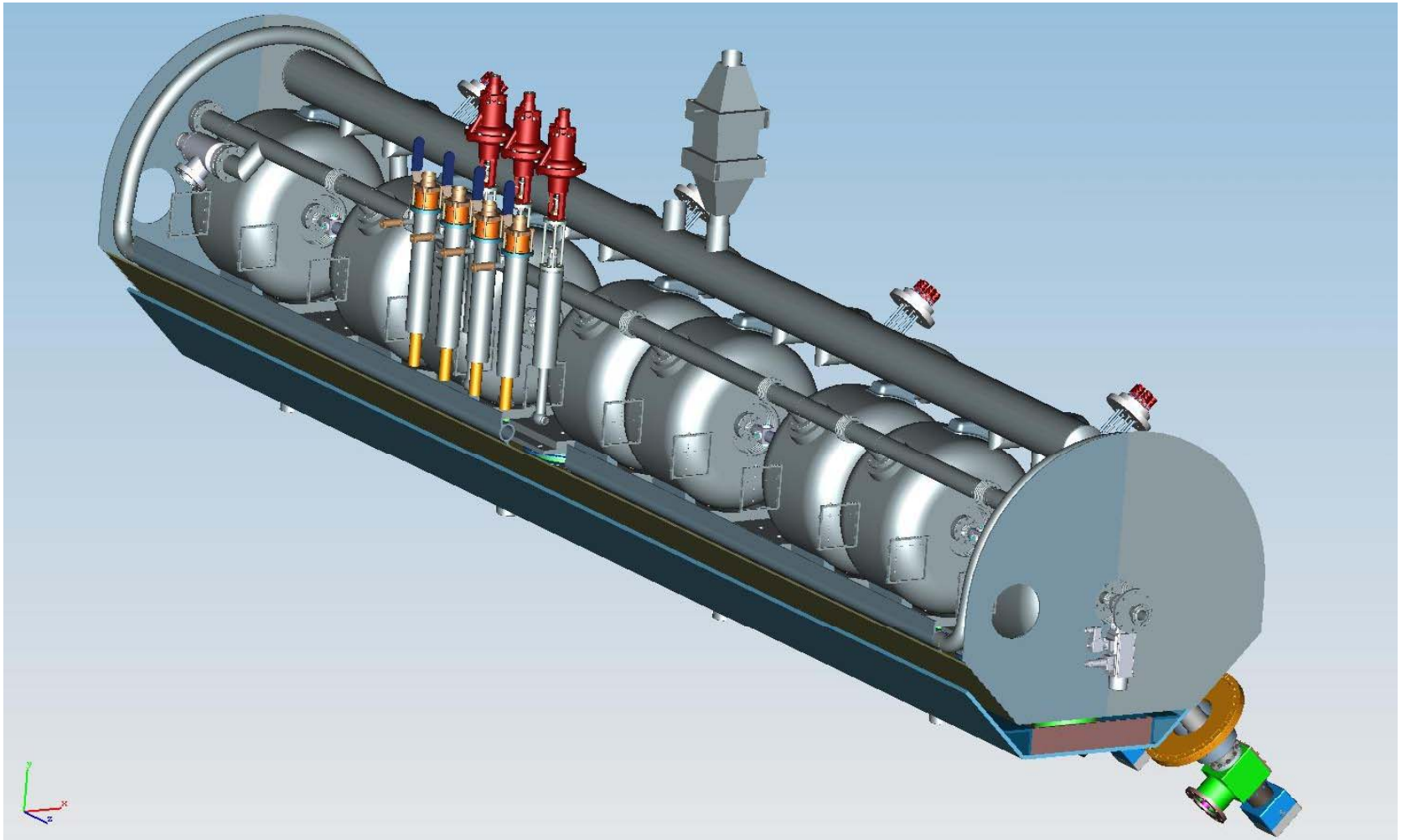
Internal piping design in progress