RF Analysis of HWR B 0.11

Mohamed Hassan, Ivan Gonin

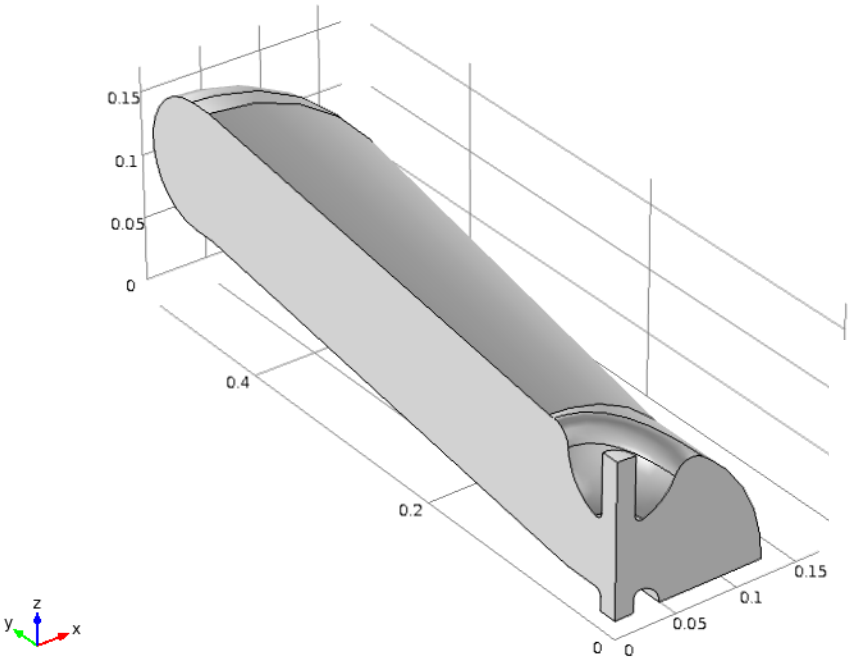
0.15
0.1
0.05
0
0.4
0.2
0
0
0.05
0.1
0.15
z
y
x

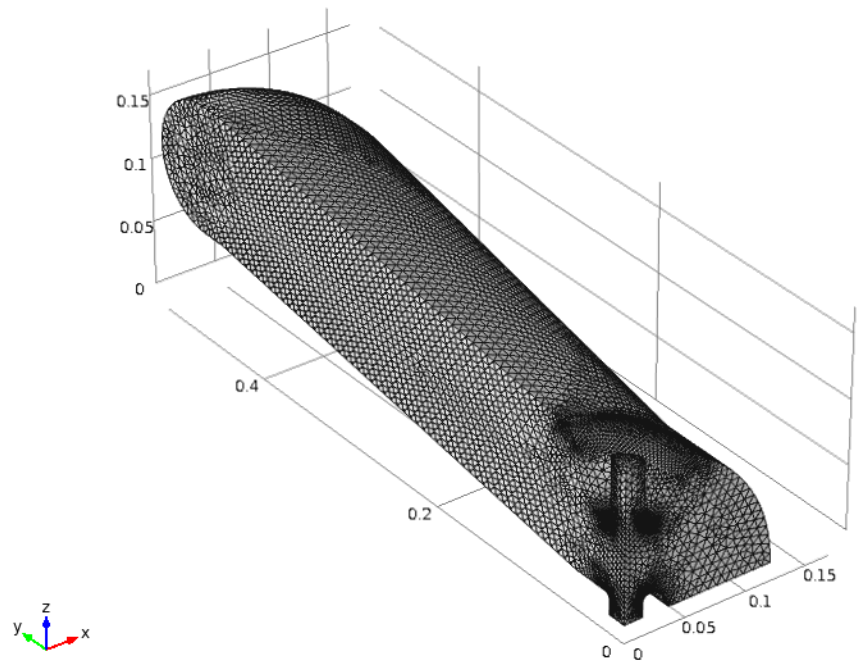
0.15
0.1
0.05
0
0.4
0.2
0
0
0.05
0.1
0.15
z
y
x

ANL

Aperture	Mesh Cells	Freq MHz	β_opt	Leff (cm)	Ep/Ea -	Bp/Ea Gs/.	R/Q Ω	G Ω
30 mm	1.04M	162.50	0.113	20.85	4.351	67.69	228.75	47.69
40 mm	1.07M	162.51	0.108	19.93	5.110	76.17	200.24	47.36
33 mm	1.04M	162.49	0.110	20.30	4.696	69.22	221.18	47.54

FNAL

Aperture	Mesh Cells	Freq MHz	β_opt	Leff (cm)	Ep/Ea -	Bp/Ea Gs/[MV/m]	R/Q Ω	G Ω
30 mm	1.04M 389K	162.50	0.113	20.85	**4.456** (2.4%)	**63.827** (-5.7%)	**228.95** (0.08%)	**47.74** (0.1%)
40 mm	1.07M 431K	162.51	0.108	19.93	**5.267** (3.1 %)	**71.45** (-6.2%)	**200.52** (0.14%)	**47.73** (0.78%)
33 mm	1.04M 335K	162.49	0.110	20.30	**4.744** (1.0%)	**64.926** (-6.2%)	**221.48** (0.14%)	**47.74** (0.42%)

ANL-Dec8th

Electric Field MV/m

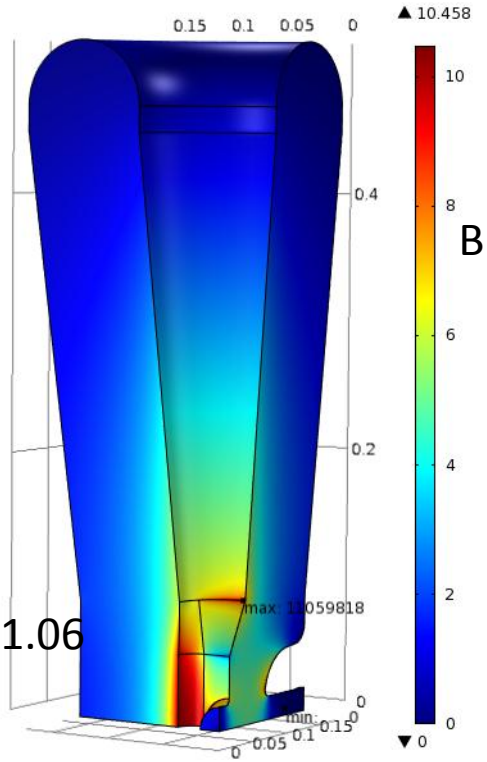

Ep=11.06

Magnetic Field Gauss

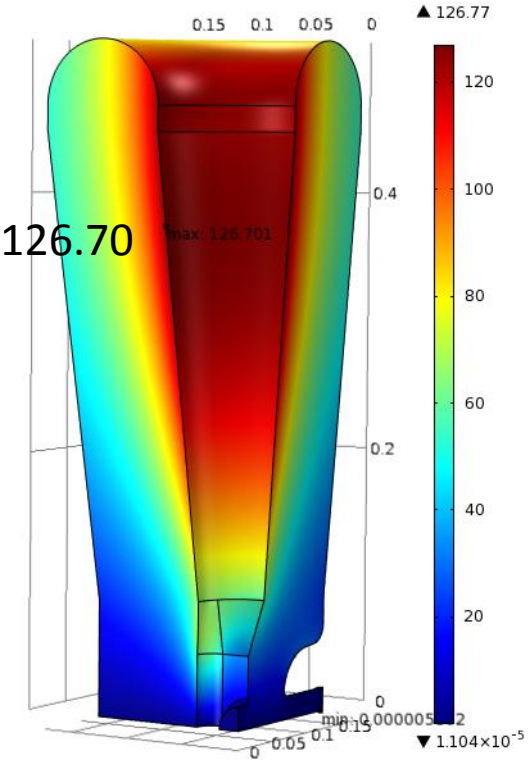

Bp=126.70

Eacc=2.218271 MV/m

Aperture	Mesh Cells	Freq MHz	β_opt	Leff (cm)	Ep/Ea -	Bp/Ea Gs/[MV/m]	R/Q Ω	G Ω
33 mm	374 K	162.5256	0.110	20.30	4.986	57.117	198.57	48.07

ANL-Dec8th-noSharpEdge

Electric Field MV/m

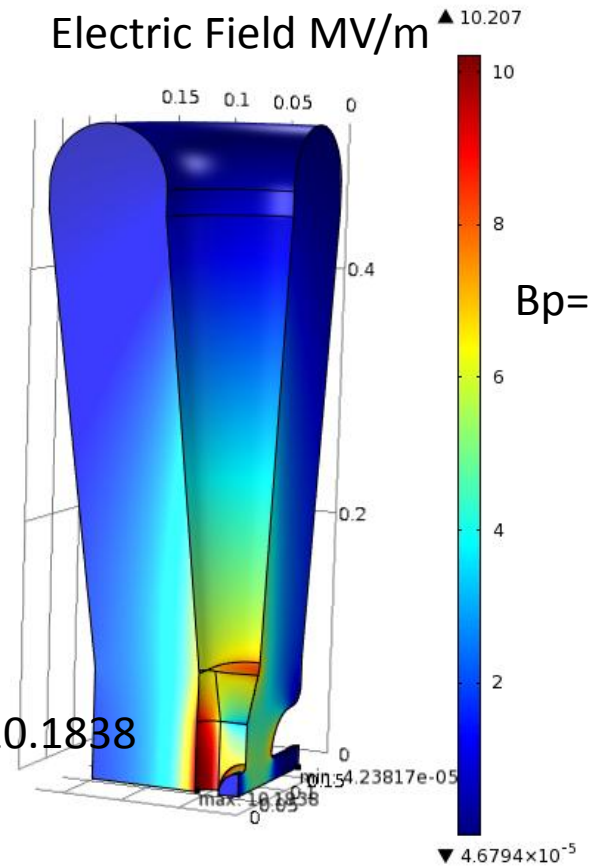

Ep=10.1838

Magnetic Field Gauss

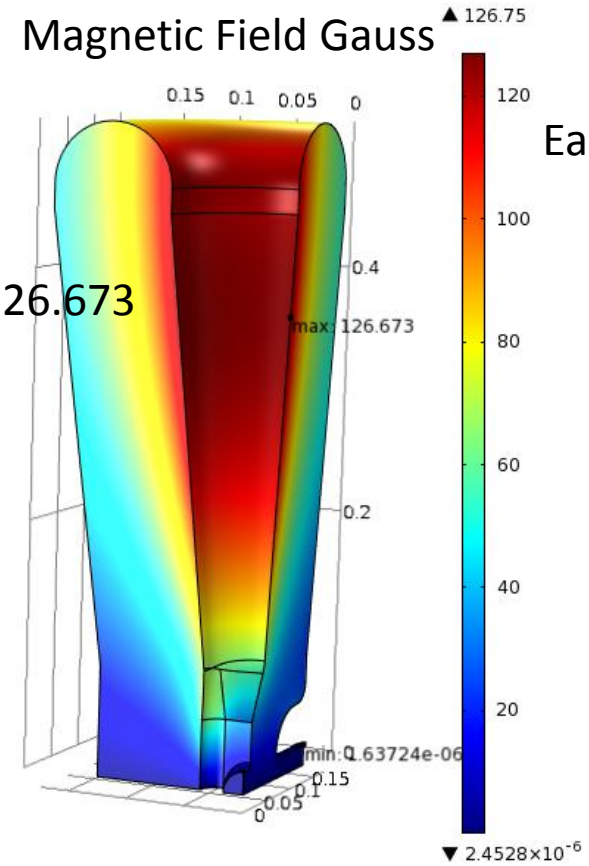

Bp=126.673

Eacc=2.218469 MV/m

Aperture	Mesh Cells	Freq MHz	β_opt	Leff (cm)	Ep/Ea -	Bp/Ea Gs/[MV/m]	R/Q Ω	G Ω
33 mm	420 K	162.5329	0.110	20.30	4.59	57.10	198.60	48.28

ANL-Jan20th

Electric Field MV/m

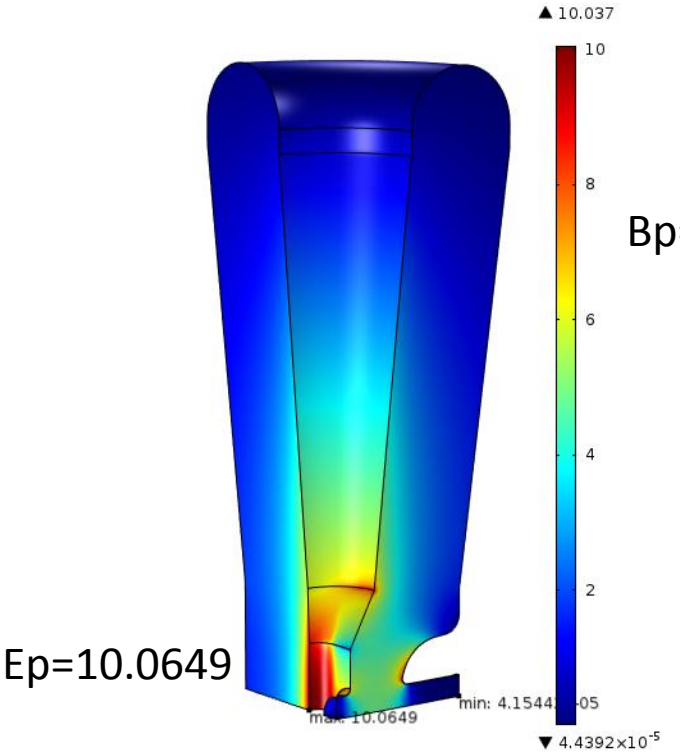

Ep=10.0649

Magnetic Field Gauss

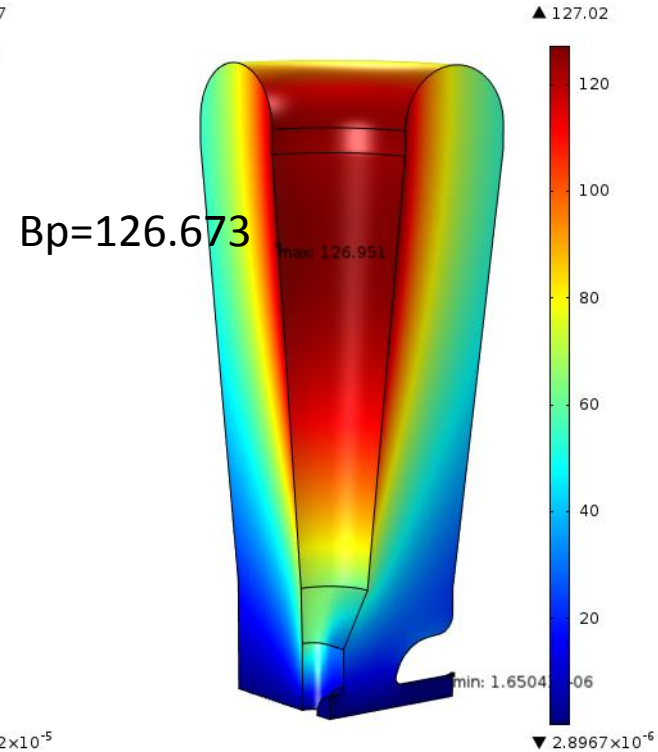

Bp=126.673

Eacc=2.19928 MV/m

Aperture	Mesh Cells	Freq MHz	β_opt	Leff (cm)	Ep/Ea -	Bp/Ea Gs/[MV/m]	R/Q Ω	G Ω
33 mm	337K	162.507	0.110	20.30	4.576	57.60	195.21	47.95

ANL-Jan20th - 2

Electric Field MV/m

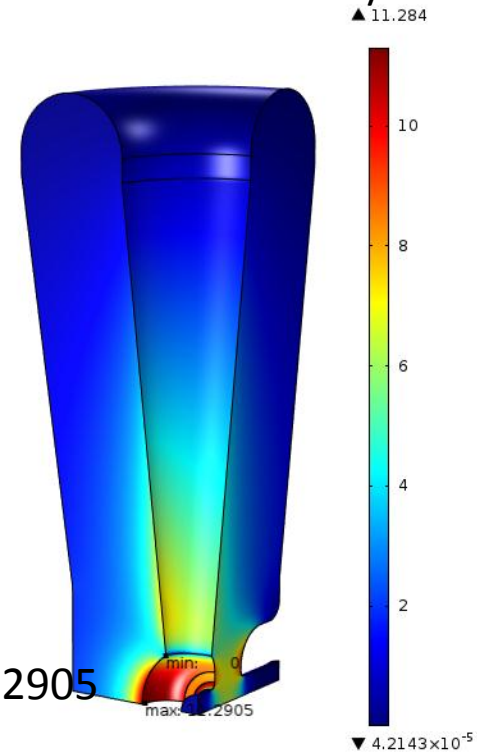

Ep=11.2905

Magnetic Field Gauss

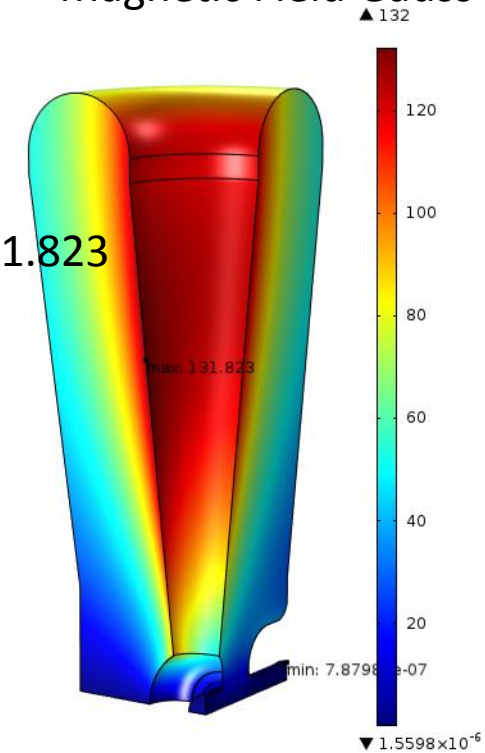

Bp=131.823

Eacc=2.5526 MV/m

Aperture	Mesh Cells	Freq MHz	β_opt	Leff (cm)	Ep/Ea -	Bp/Ea Gs/[MV/m]	R/Q Ω	G Ω
33 mm	371K	162.504	0.110	20.30	4.423	51.64	252.68	47.95