HWR to SSR1 Cryomodule Absorber Assembly

TNicol
March 9, 2012

Absorber Assembly

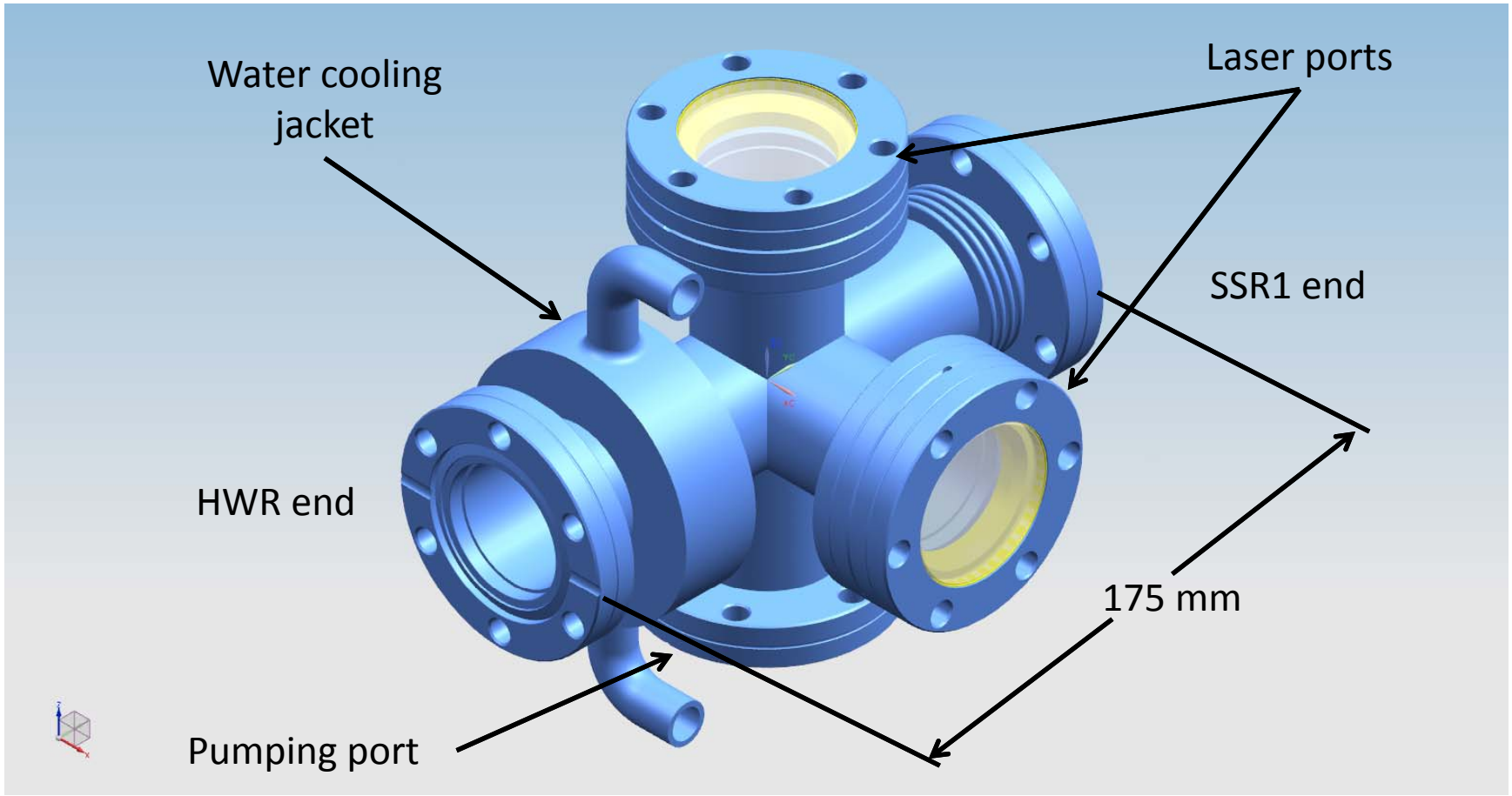

Absorber Assembly

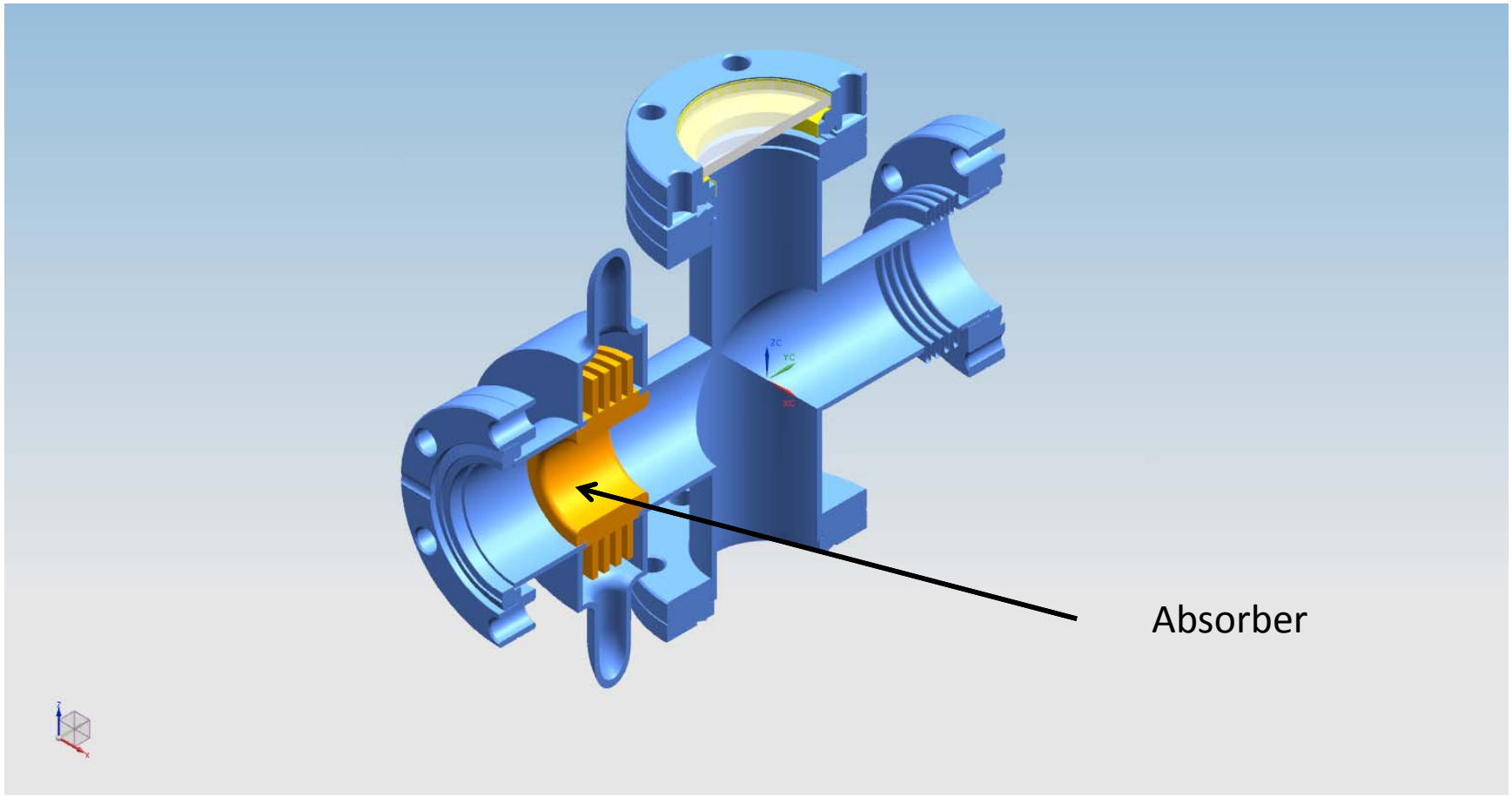

Absorber

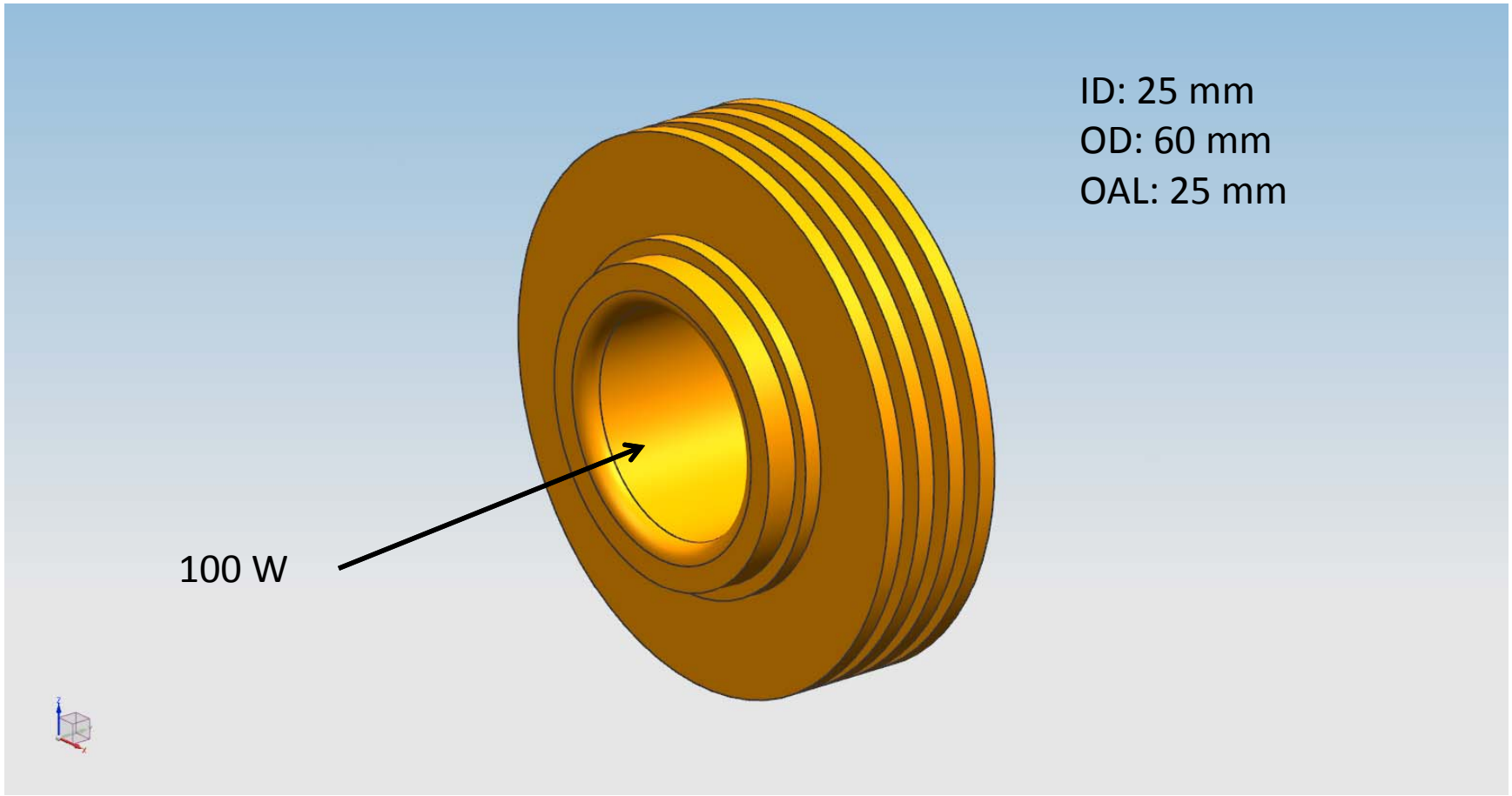
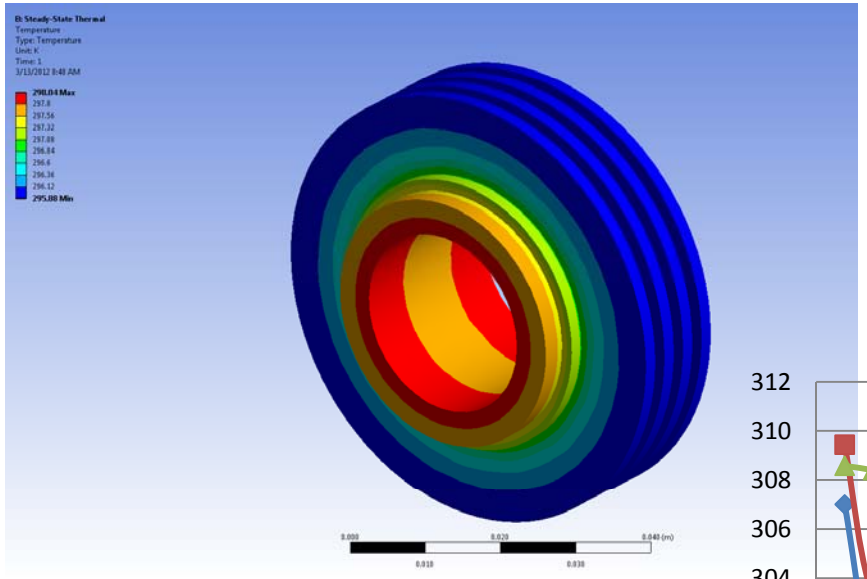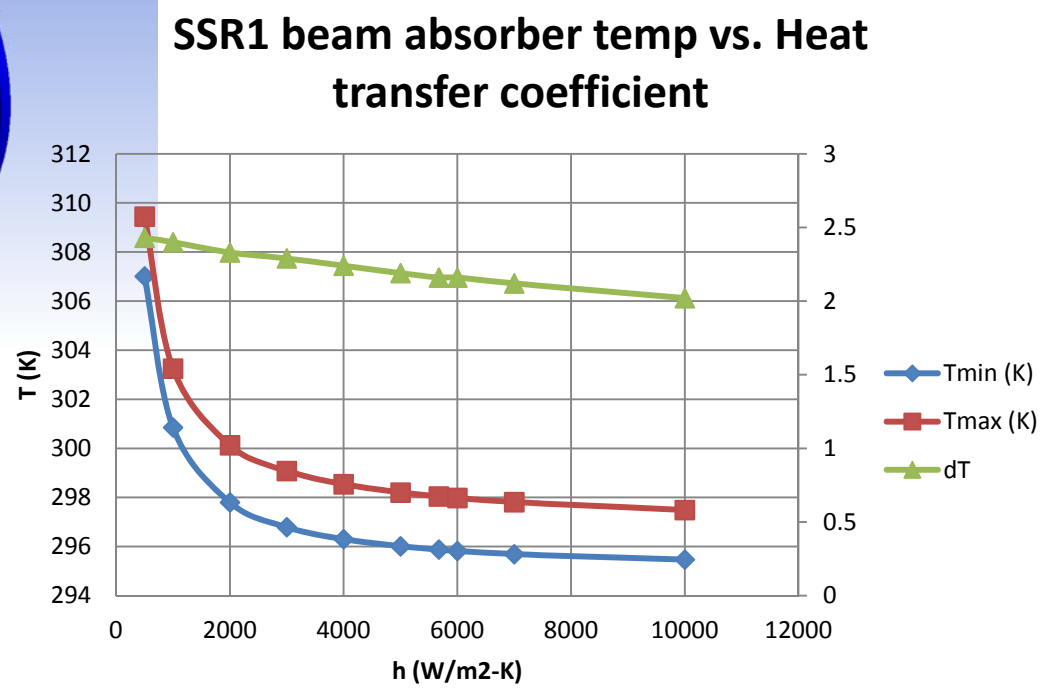
Absorber Temperature