Focusing in PXIE Cryomodules

Valeri Lebedev
Fermilab

Feb. 9, 2012

Optics

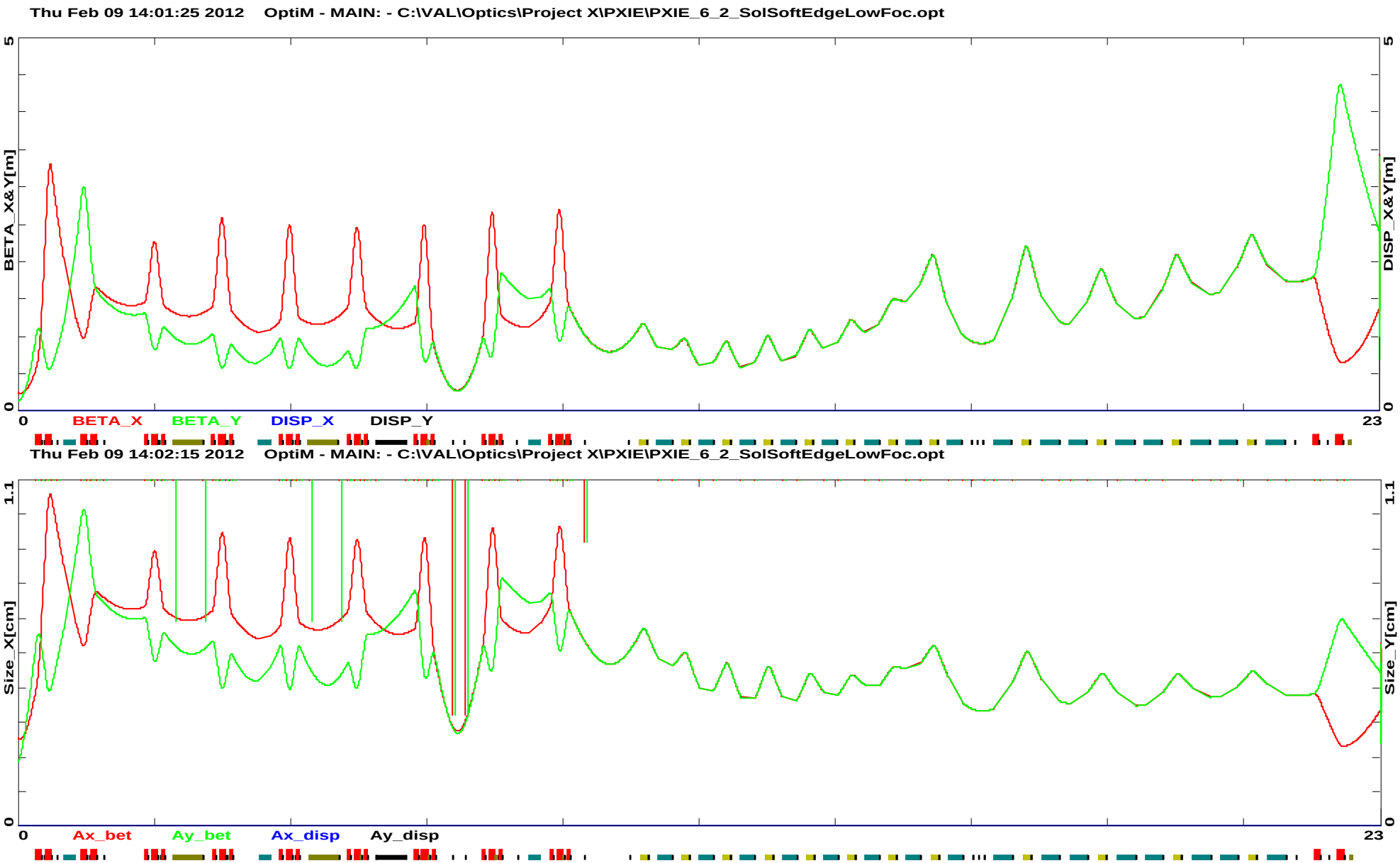

Beta-functions and beam 3σ envelopes in PXIE

Parameters of solenoids

Name	L[cm]	B[kG]	$\int B^2 dL$ † [T^2m]	$\int B^2 dL$ (Shteynas & Solyak) [T^2m]	$\int B^2 dL$ (Shteynas & Solyak), 2nd SSR1
cHW1	12	16.92	0.258	0.588	
cHW2	12	19.61	0.347	0.588	
cHW3	12	24.58	0.544	0.616	
cHW4	12	27.79	0.696	0.625	
cHW5	12	28.96	0.756	0.654	
cHW6	12	27.41	0.677	0.723	
cHW7	12	23.72	0.507	0.516	
cHW8	12	35.82	1.156	1.099	
cSSR1	12	43.28	1.688	1.77	2.17
cSSR2	12	42.43	1.622	2.01	2.07
cSSR3	12	43.18	1.680	2.53	2.01
cSSR4	12	43.4	1.697	2.53	1.96

† decay length of 3 cm is taken into account (scale factor=0.751)

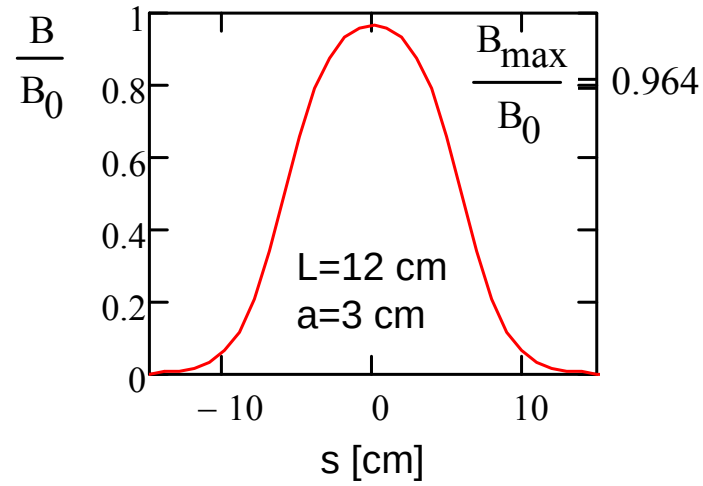

$$\frac{1}{B_0^2 \cdot L} \cdot \int_{-\infty}^{\infty} B^2 \, ds = 0.751$$

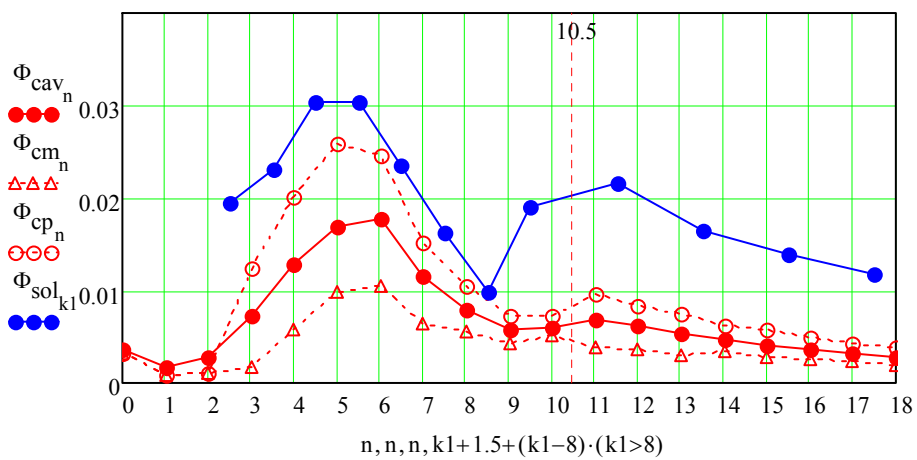

Focusing strength (cm^{-1}) for solenoids (blue) and cavities defocusing (red) for reference particle and ±4σ

Maximum solenoid strength

HW - $1.156 * 1.31^2 = 2\ T^2m$

SSR1 - $2.53 * 1.25^2 = 4\ T^2m$

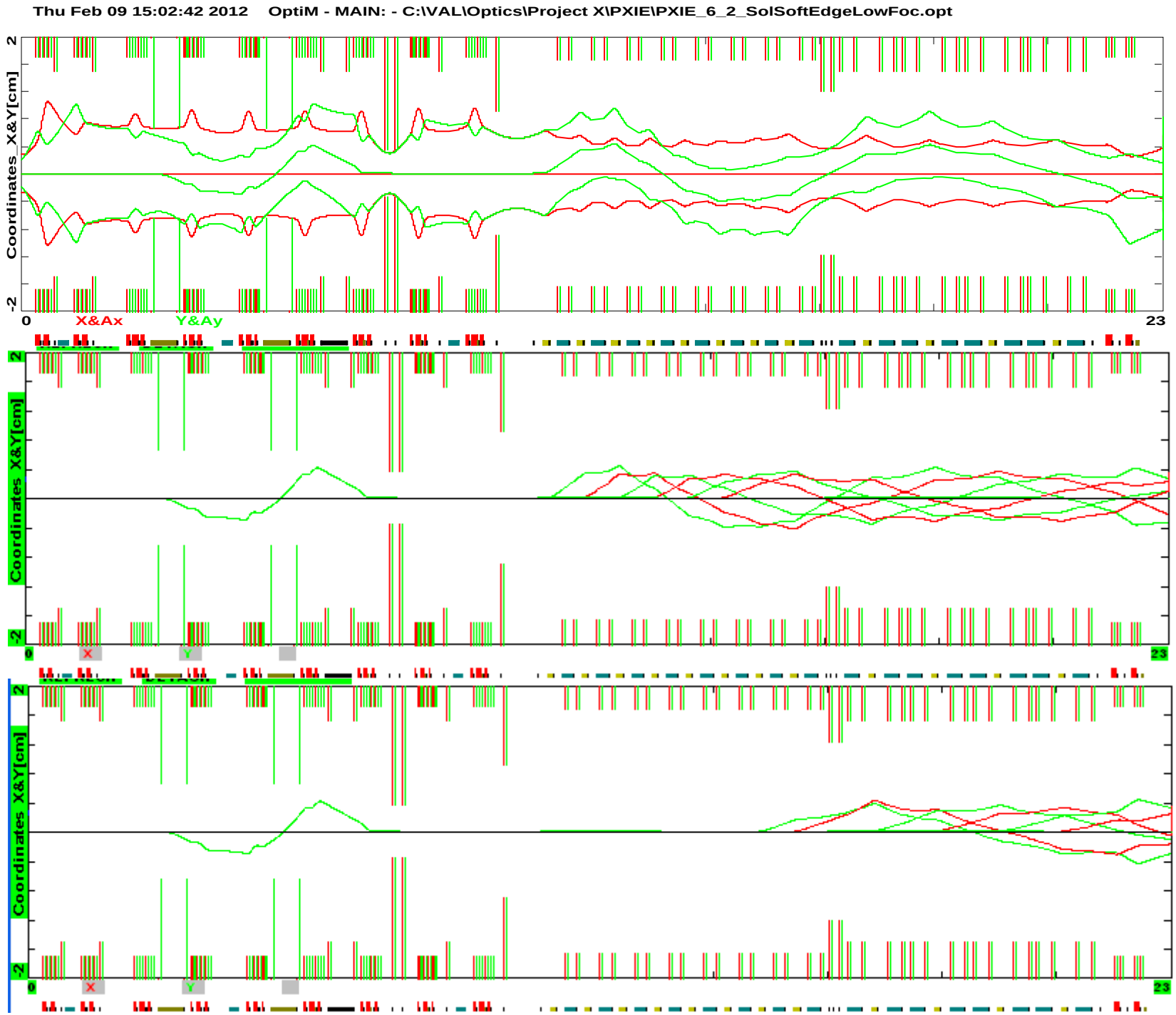

Orbit excitation by one corrector with strength of 1 kG cm; rotation due to solenoids is removed

Corrector strength

- For given corrector strength there are small variations of maximum orbit excitation on corrector location
- Corrector with 1 kG cm makes 4 mm orbit excitation
  - Set maximum corrector strength to 2.5 kG cm = 0.0025 T m
    - It will excite betatron oscillations of ~10 mm
    - It is 2 times smaller than in the previous version 0.005 T m in the present FRS

      $\Rightarrow$ Because softer focusing is used in both cryomodules

Required Alignment of Solenoids

- Set requirement to the solenoid alignment in angle so that it would make the kick equal to 20% of maximum corrector strength; i.e. 0.5 kG cm (rms)
  - For L=12 cm and B_{max}=42 kG one obtains the angle error equal to 1 mrad (it will excite 2 mm betatron motion)
  - For 12 solenoids it yields $2*12^{1/2}$=7 mm
  - Thus rms angle error of 1 mrad with probability 95 % will yield beam displacement <20 mm (3σ)
  - Thus, the solenoid rms alignment of 1 mrad has to be sufficient to shoot the beam through the machine aperture. The rest has to be done with correctors (0.2 mrad in present FRS)
- Rms transverse alignment hast to be better than 0.5 mm to avoid an aperture loss due to misalignment (0.5 mm (absolute?) in present FRS)

Decay of Solenoid Field

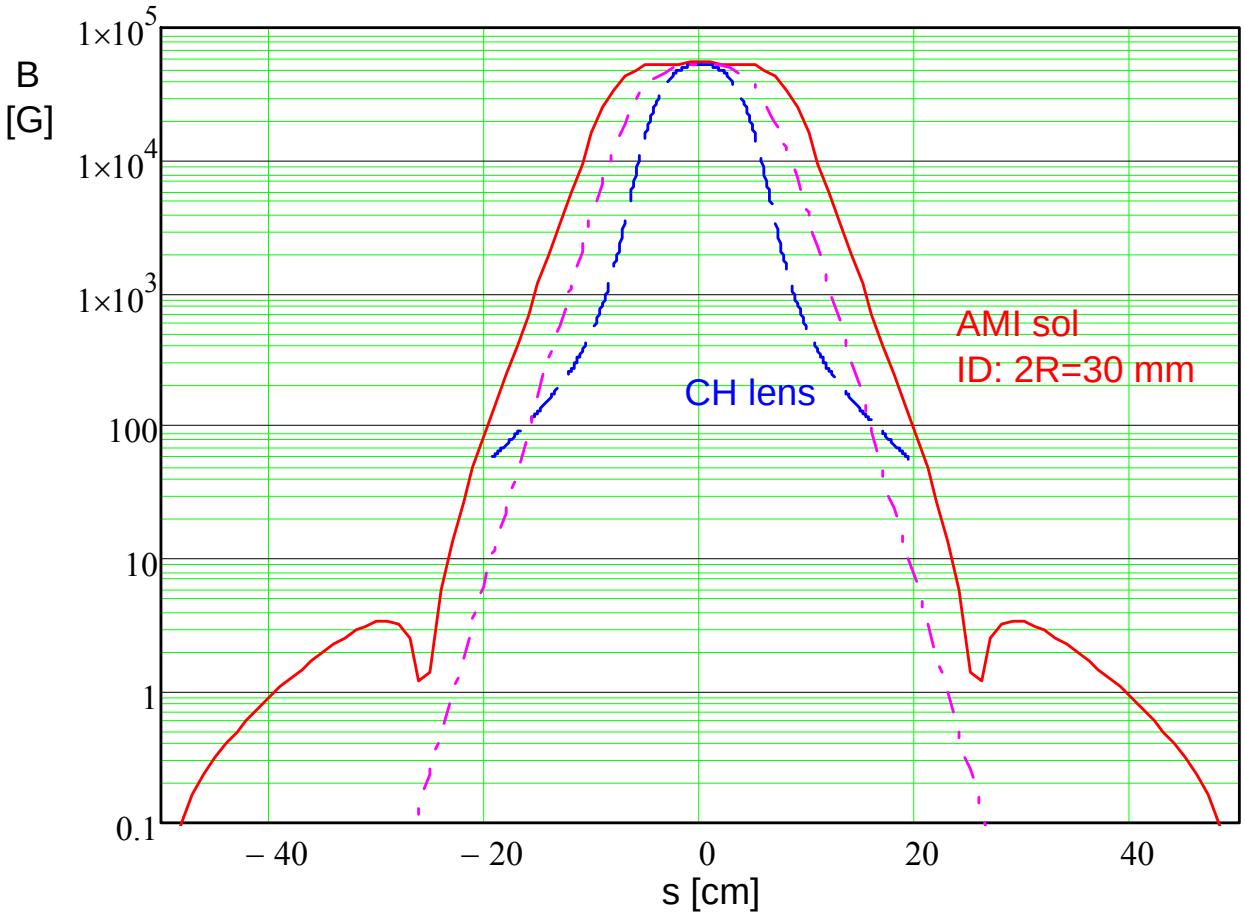

Distance from the solenoid center to the HW cavity walls ~24 cm
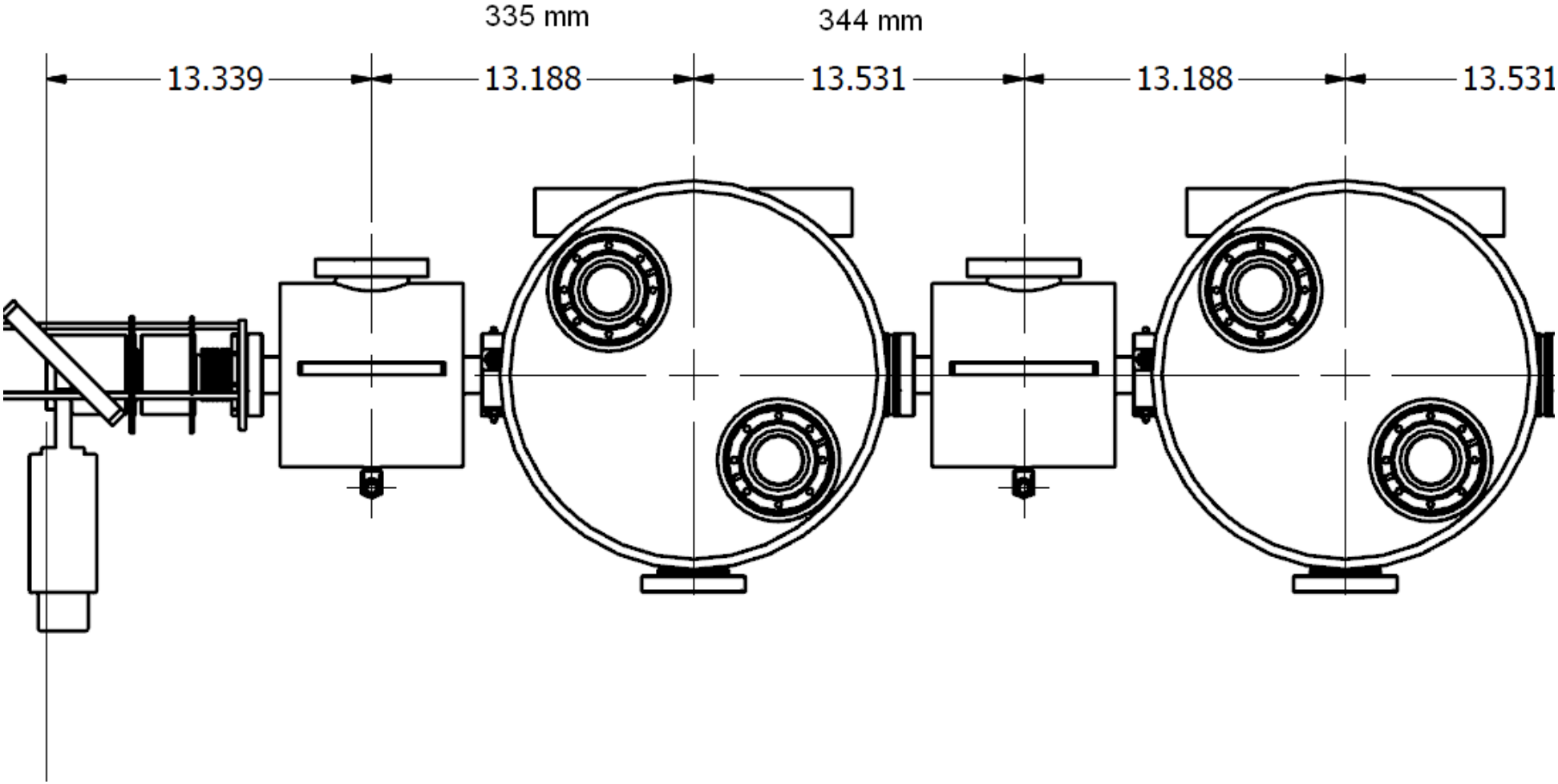
HW preliminary design (Feb.9/2012)