SSR1 Cryomodule Design Status

Tom Nicol - Fermilab

SSR1 Cryomodule

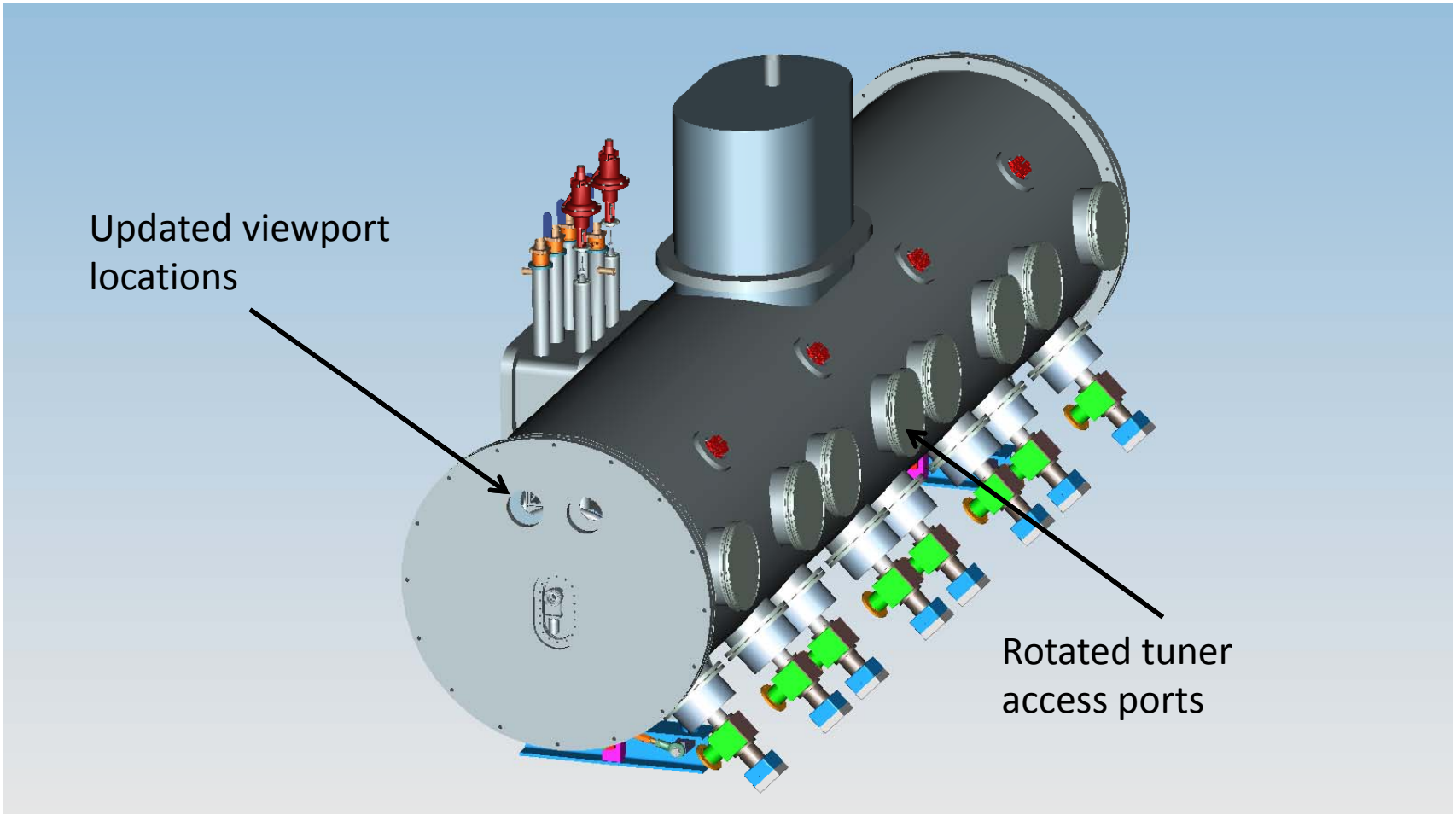

SSR1 Cryomodule

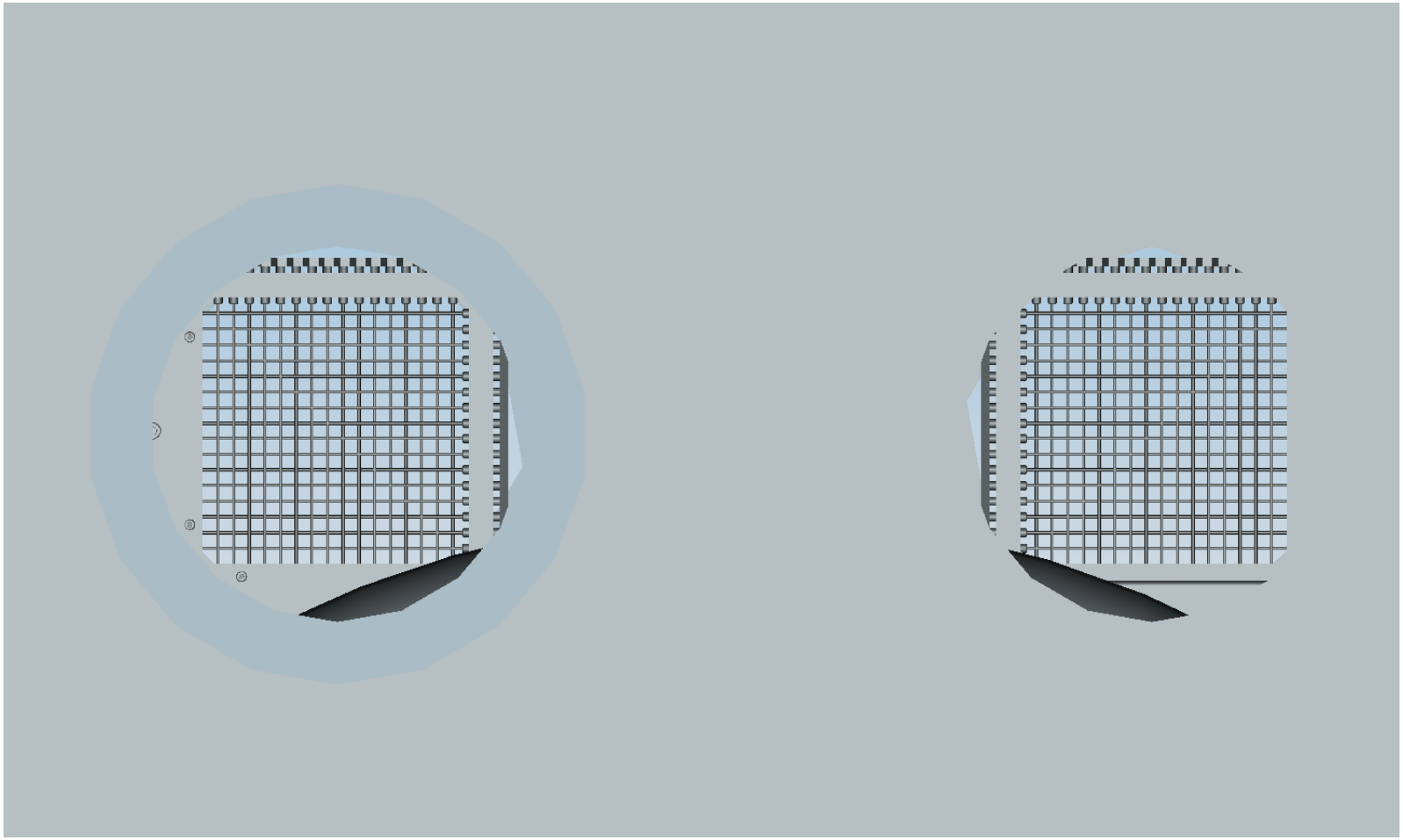

SSR1 Cryomodule

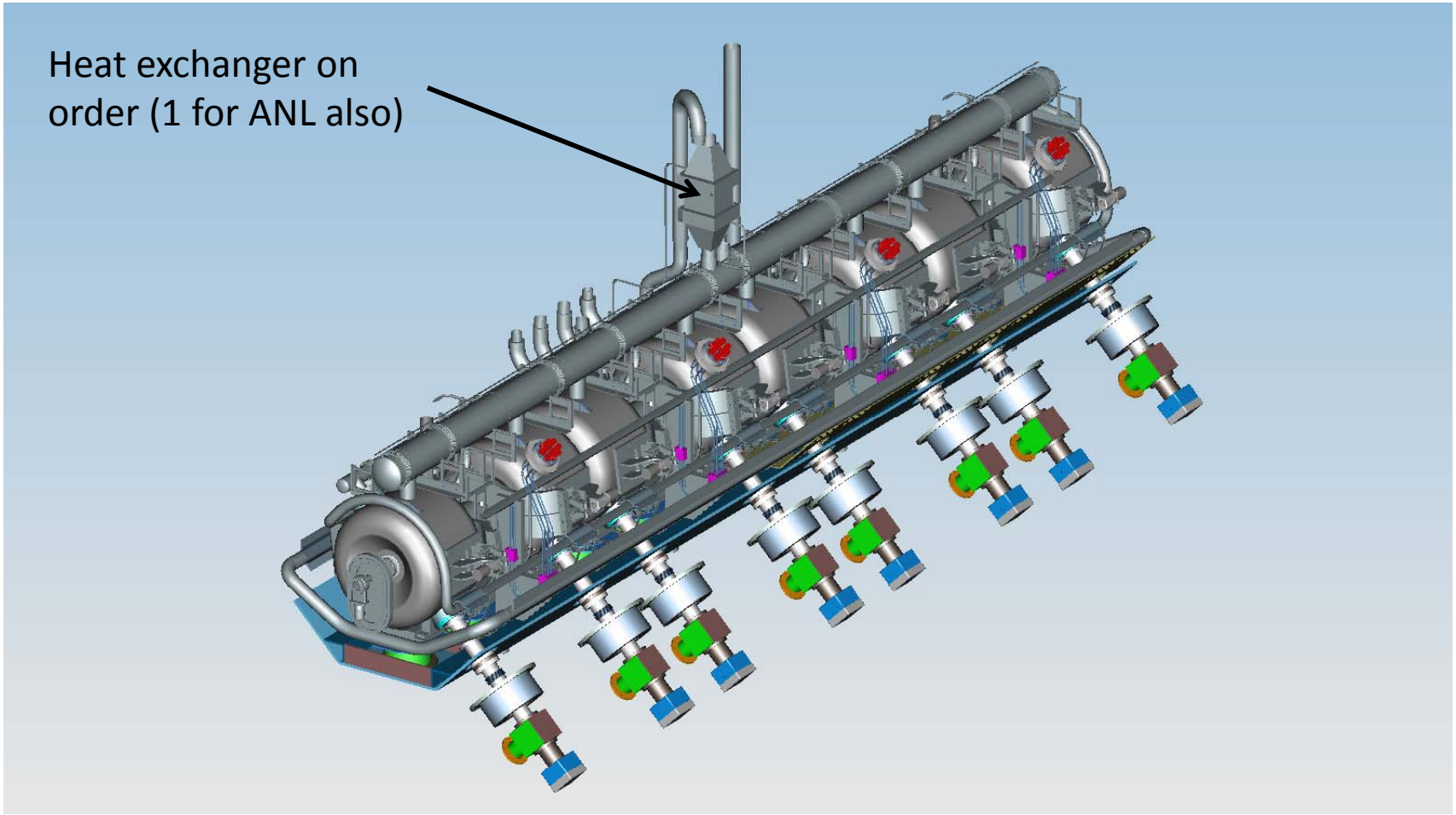

SSR1 Cryomodule

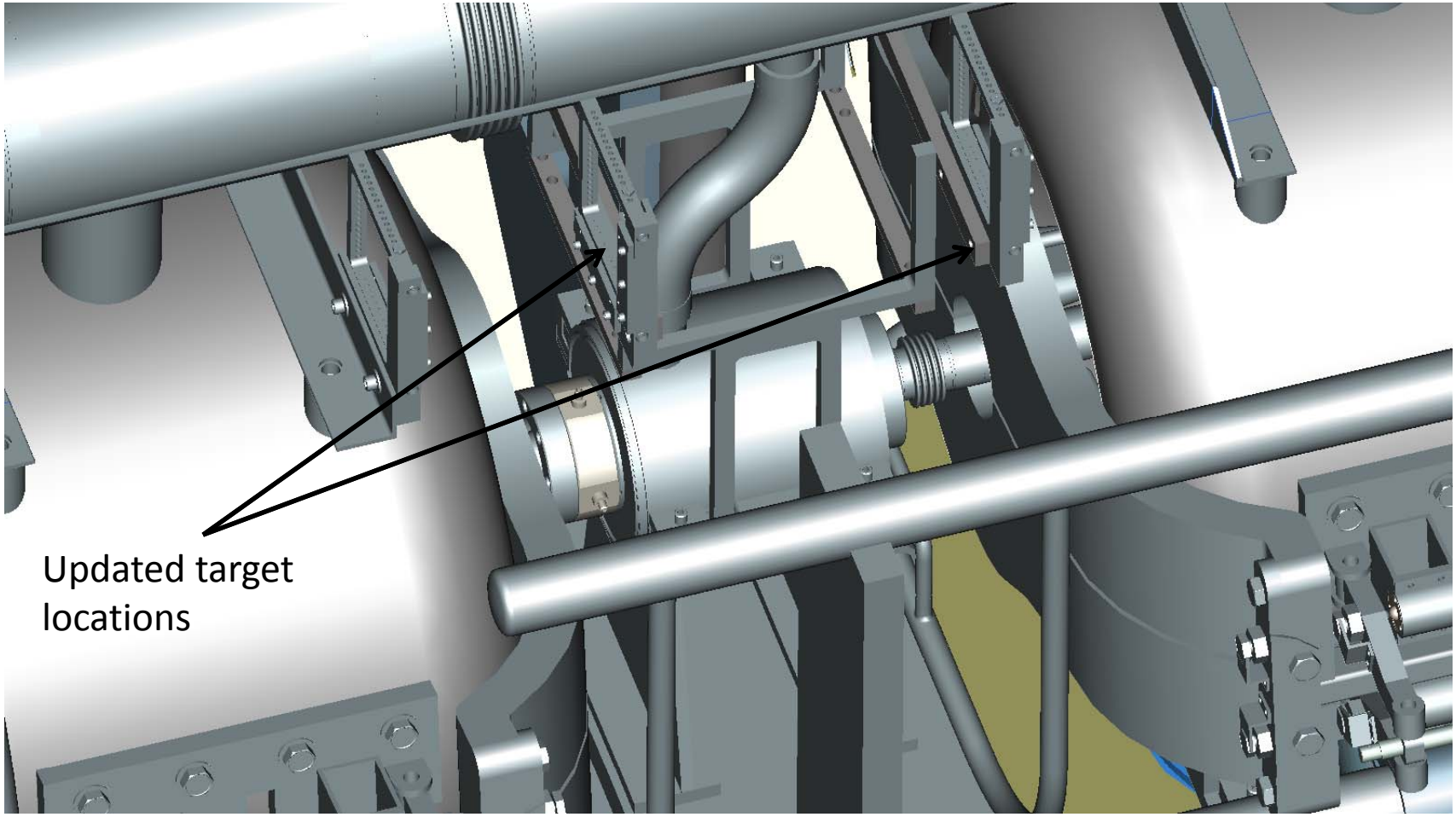

SSR1 Cryomodule

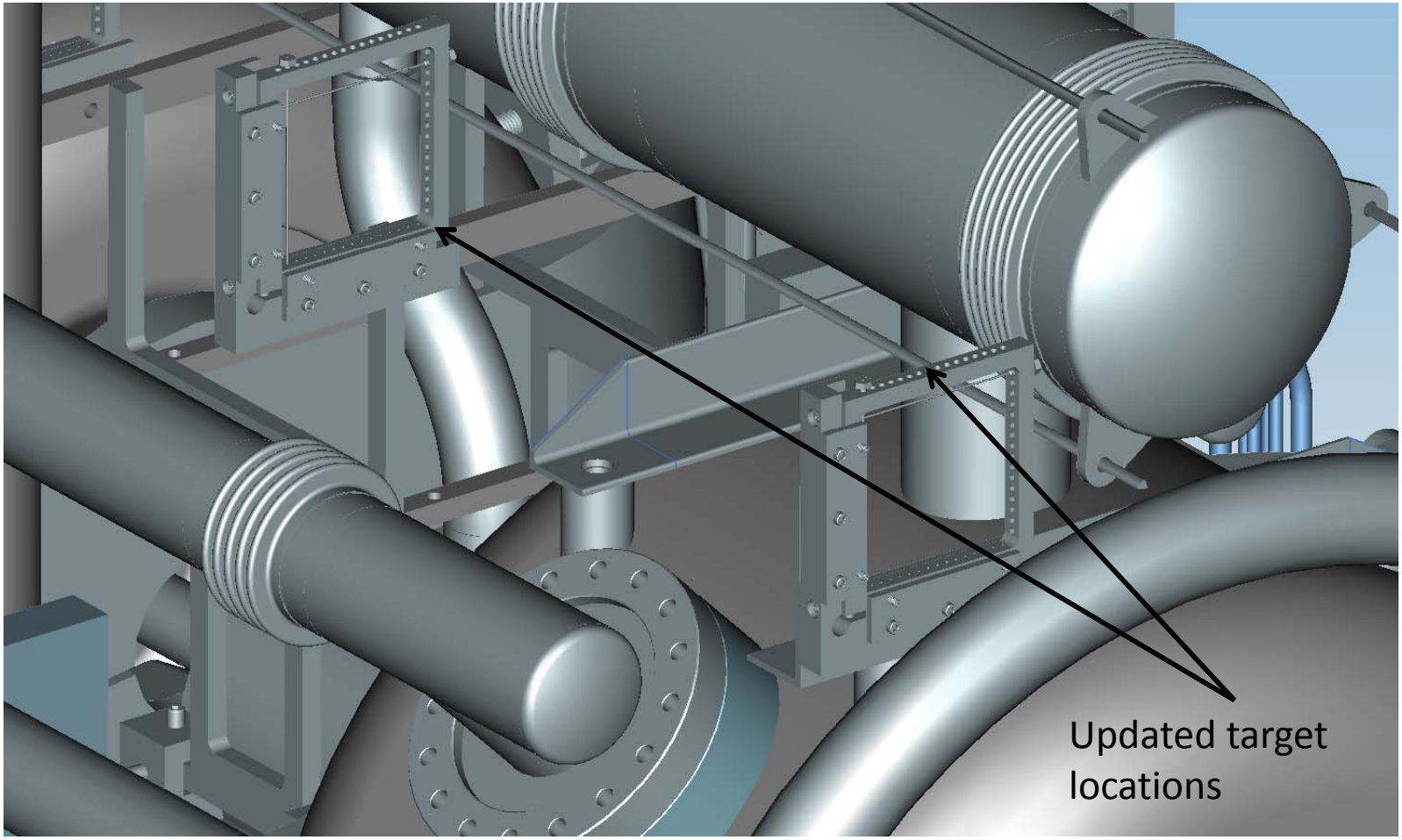

SSR1 Cryomodule

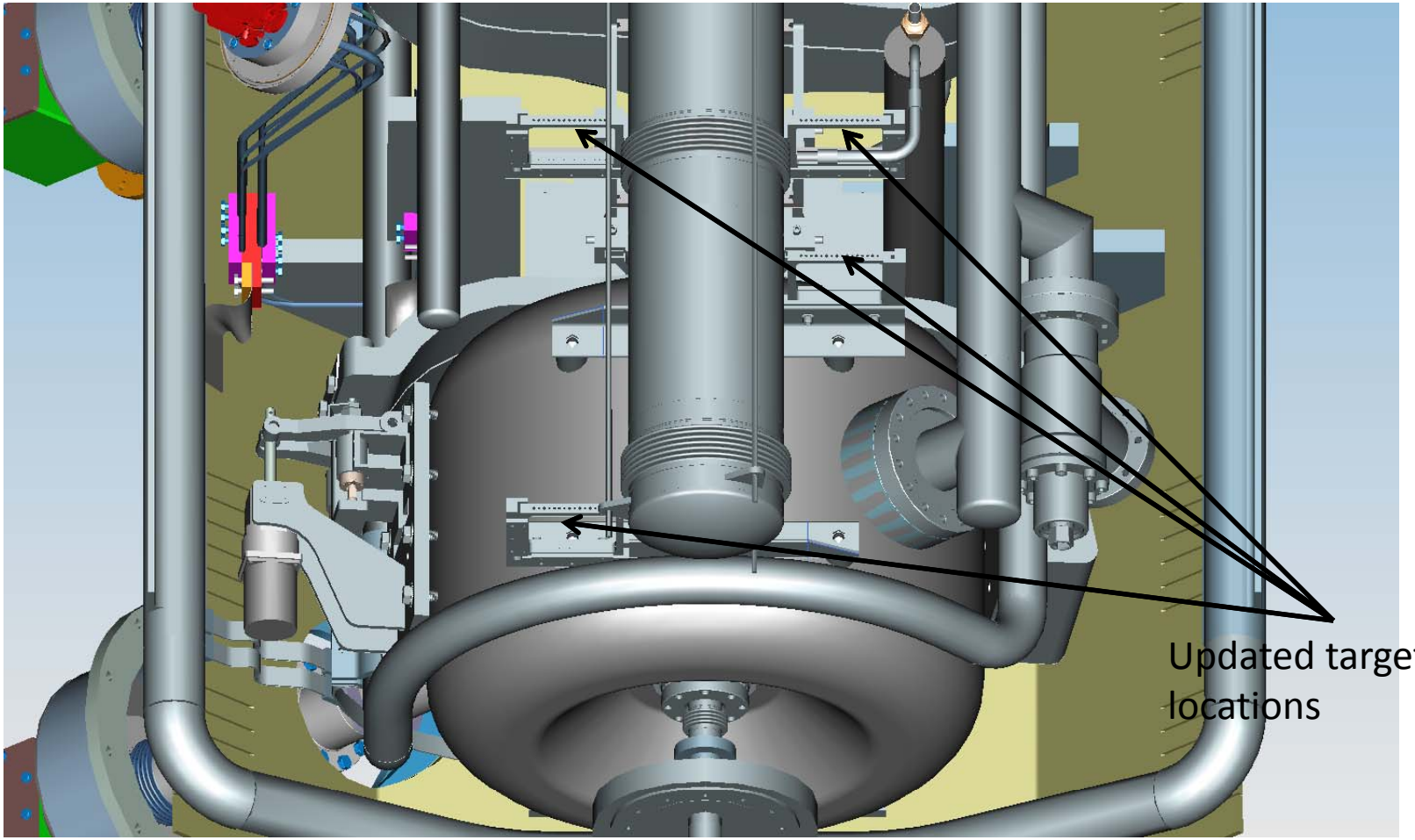

SSR1 Cryomodule

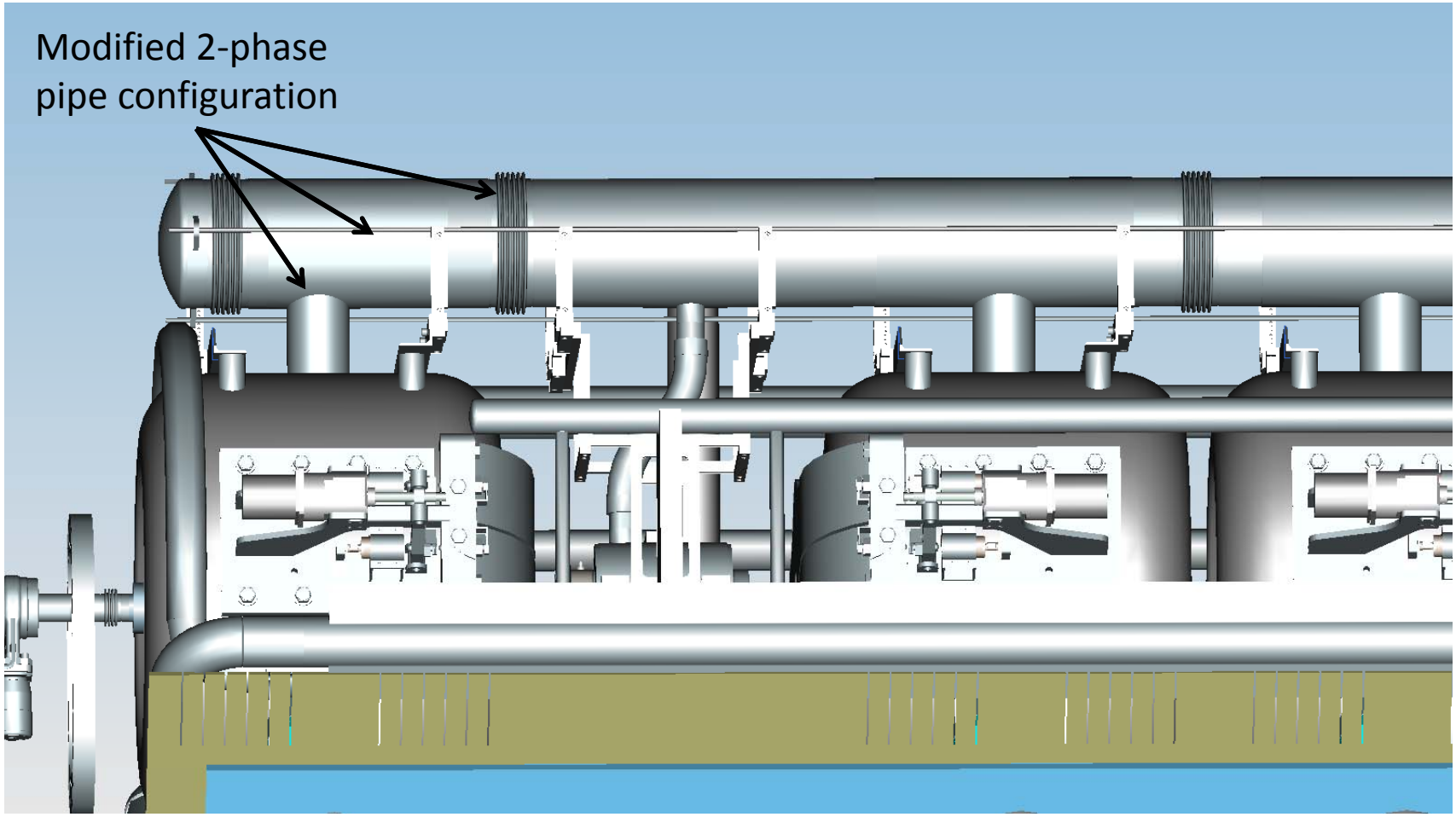

SSR1 Test Cryomodule

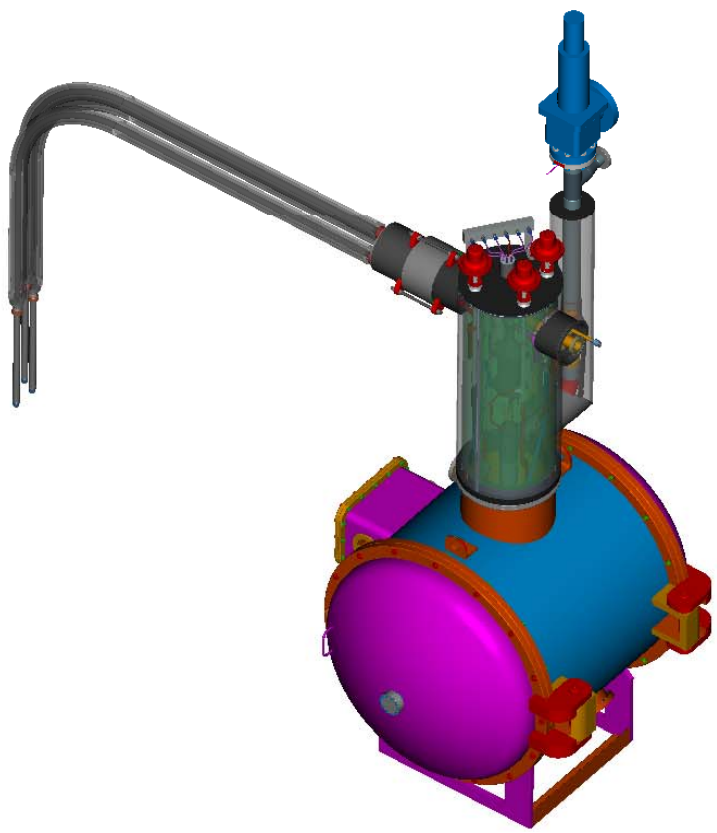

Test cryostat 2 K conversion top hat assembly should be arriving within 2 weeks.