Fermilab
Technical Division
SRF Department

ASME design on SSR1 G3

- ✓ 2010 ASME Boiler and Pressure Code section VIII, Division 2 – Part 5
  - Design by analysis methodology
  - Material properties
  - Design Load parameter
- ✓ Protection against plastic collapse
  - "Coarse" results
- ✓ Protection against collapse from buckling
- ✓ Protection against local failure
- ✓ Protection against failure from cyclic loading

D. Passarelli, M. Merio, L. Ristori, B. Wands

March 13, 2012

Conceptual Design of dressed SSR1 SRF cavity with Tuner

Helium Vessel
SS316L

Cavity
Nb

Bellows

Lever Tuner

Brazed-joint:
Beam pipes
Coupler port
Side ring

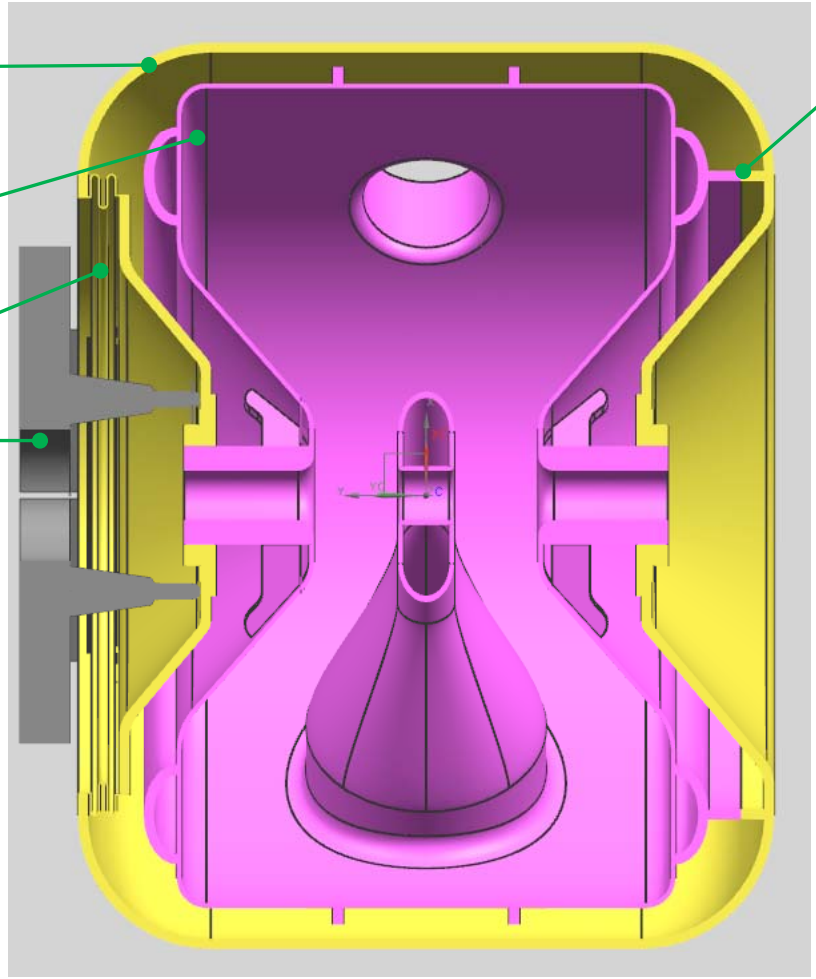

Transition ring
(under developing)

- ✓ $k_{cav} = 25\ kN/mm$
- ✓ $\frac{df}{dl} = 540\ kHz/mm$
- ✓ $\frac{df}{dp} \approx 0 \pm 10\ Hz/torr$

$$\frac{df}{dp} = -0.7 d_{BP} + 4.9$$

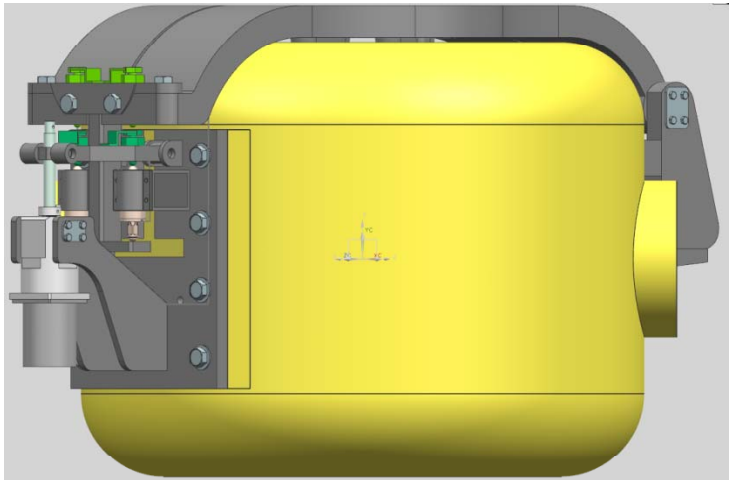

http://www-bdnew.fnal.gov/pxie/SRF/Meetings/2012/SSR1%20Tuner%20concept.pdf

2010 ASME Boiler and Pressure Code VIII Division 2 – Part 5

- According to the ES&H Fermilab manual, the Cavity and Helium Vessel can be considered a pressure vessel and it must comply with the "*2010 ASME Boiler and Pressure Vessel Code*".

Among the various options provided by the code, we decided to follow the **Design-by-Analysis methodology** described in the "2010 ASME Boiler and Pressure Vessel Code section VIII, Division 2 – Part 5".

Division 1: formulas, simple shape, typically thicker walls

Division 2: complex shape, FEM analysis

Requirement:

- achieve the desired Maximum Allowable Working Pressure (MAWP)
  - $MAWP \geq 2\ bar$ at room temperature (293K)
  - $MAWP \geq 4\ bar$ at cryogenic temperature (2K)

2010 ASME Boiler and Pressure Code VIII Division 2 – Part 5

The ***Design-by-Analysis methodology*** utilizes the results from *finite element analysis* to assure:

1. Protection against plastic collapse

   avoid unbounded displacement in each cross-section of the structure due to the plastic hinge

   – Elastic stress analysis method
   – Elastic-plastic stress analysis method

2. Protection against collapse from buckling

   buckling is characterized by a sudden failure of a structural member subjected to high compressive stress, where the actual compressive stress at the point of failure is less than the ultimate compressive stresses that the material is capable of withstanding.

   – Elastic-plastic stress analysis

3. Protection against local failure (i.e. joints)

   – Elastic analysis
   – Elastic-plastic analysis

4. Protection against failure from cyclic loading

   – Elastic ratcheting analysis method

Material properties

The main parts of the Helium Vessel and Cavity are made in *SS316L* and *Niobium,* respectively.
To describe the material model required to perform the different kind of analysis, by finite element software, the following mechanical and thermal properties for both materials are needed.

- Mechanical properties (at 293K and at 2K):
  - Linear Elastic properties (E, ν)
  - elastic-plastic curve

  Niobium by FESHM Chapter 5031.6 - Dressed Niobium SRF Cavity Pressure Safety.pdf

  and ER10163-SRF_Cavities_Spec

  SS316L by "2010 ASME Boiler and Pressure Vessel Code section II, Part D"
- Thermal properties: coefficient thermal expansion (CTE) curve from 293K to 2K.

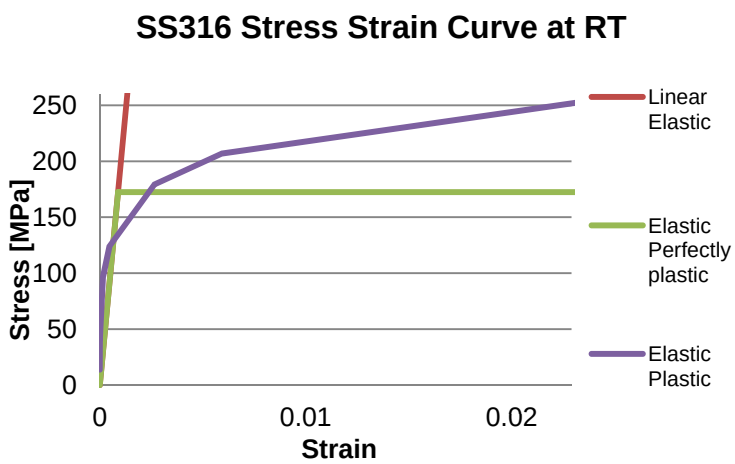

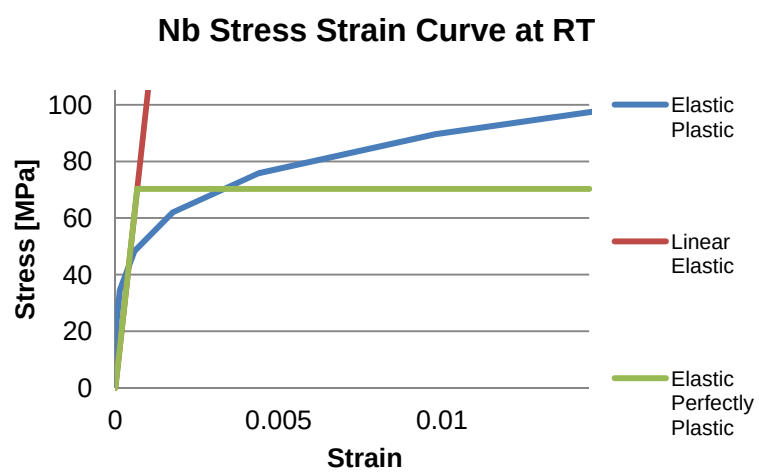

Design Load parameter
SSR1 load conditions

Table 4. Reproduction of Table 5.2 of Div. 2: "Load Descriptions"

Design Load Parameter	Description
P	Internal and external maximum allowable working pressure
P_s	Static head from liquid or bulk materials (e.g. catalyst)
D	Dead weight of the vessel, contents, and appurtenances at the location of interest, including the following: Weight of vessel including internals, supports (e.g., skirts, lugs, saddles, and legs), and appurtenances (e.g., platforms, ladders, etc) Weight of vessel contents under operating and test conditions Refractory linings, insulation Static reaction from the weight of attached equipment, such as motors, machinery, other vessels, and piping
L	Appurtenance live loading Effects of fluid momentum, steady state and transient
E	Earthquake loads (see ASCE 7 for the specific definition of the earthquake load, as applicable)
W	Wind loads
W_{pt}	Is the pressure test wind load case. The design wind speed for this case shall be specified by the Owner-User
S_s	Snow loads
T	Is the self-restraining load case (i.e., thermal loads, applied displacements). This load case does not typically affect the collapse load, but should be considered in cases where elastic follow-up causes stresses that do not relax sufficient to redistribute the load without excessive deformation.

Note: Loads in red are the only loads considered in the dressed cavity analysis.

The relevant loads acting on the SSR1 dressed cavity are:

- "P" pressure in the helium space under fault condition
- "P_s" static head from liquid Helium
- "D" dead weight of the system
- "T" cooldown from 293K to 2K
- "T" controlled axial displacement of 0.25mm at the Beam Pipe ("tuning" operation)

For each analysis the code provides the *load combination* and *factored load cases*

Design-by-Analysis Scheme

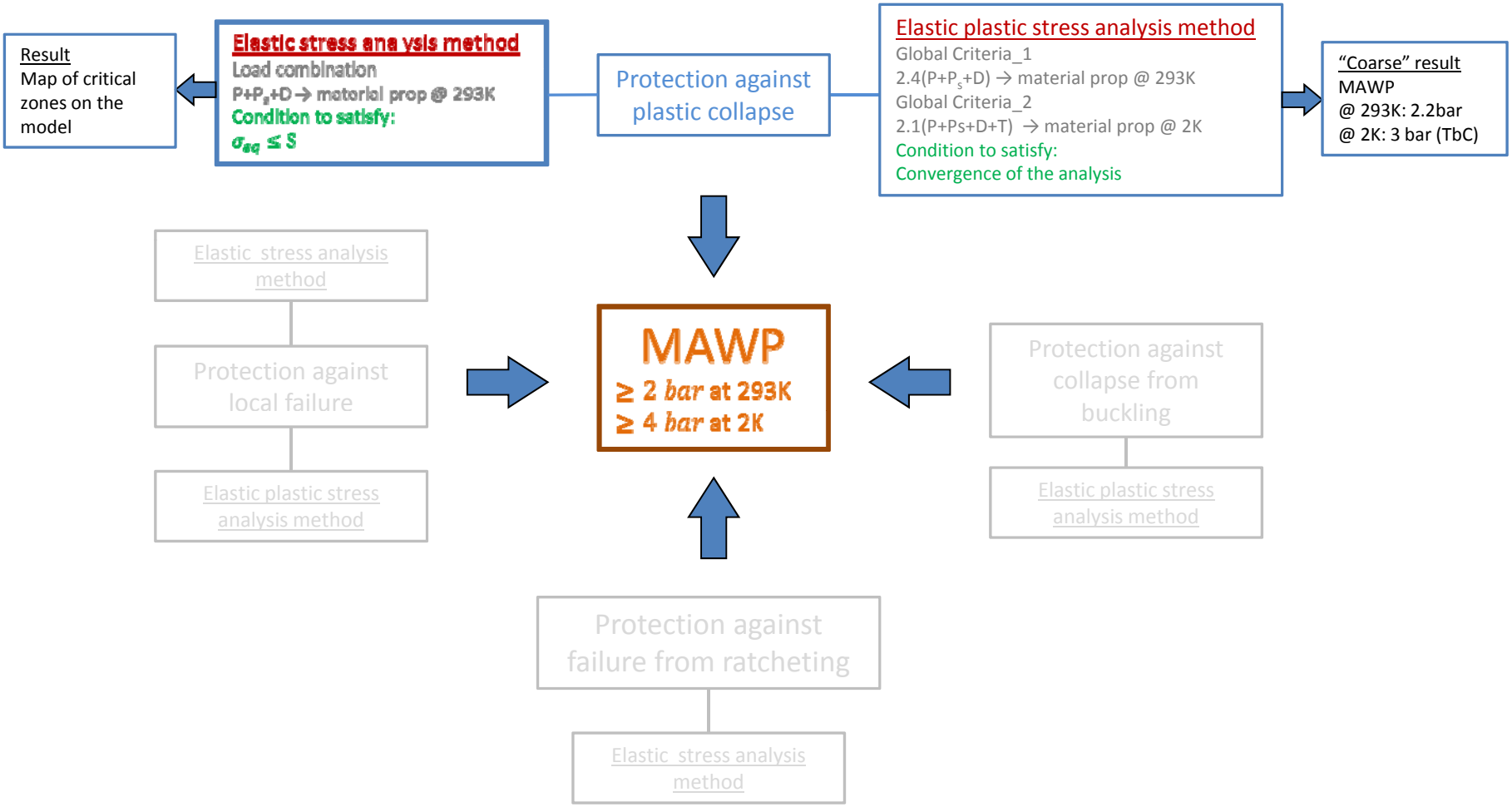

Protection against plastic collapse
Elastic stress analysis - @ 293K and 2bar

Elastic material property @ T=293K
Load combination applied: $P+P_s+D$
P = 2 bar
Refined mesh
Condition to satisfy:

$\sigma_{eq} \leq S$

- $S_{Nb} = 25\ MPa$
- $S_{SS316L} = 100\ MPa$

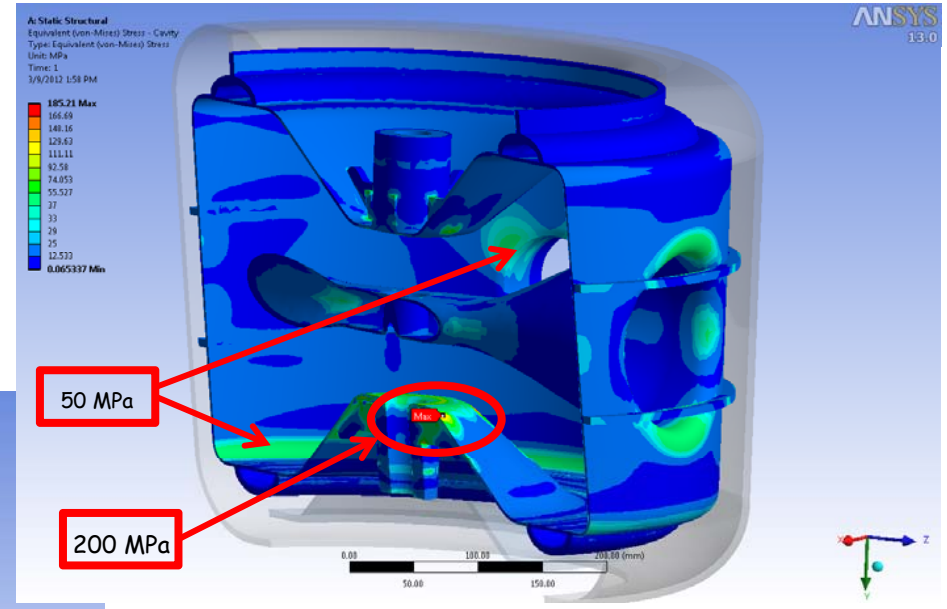

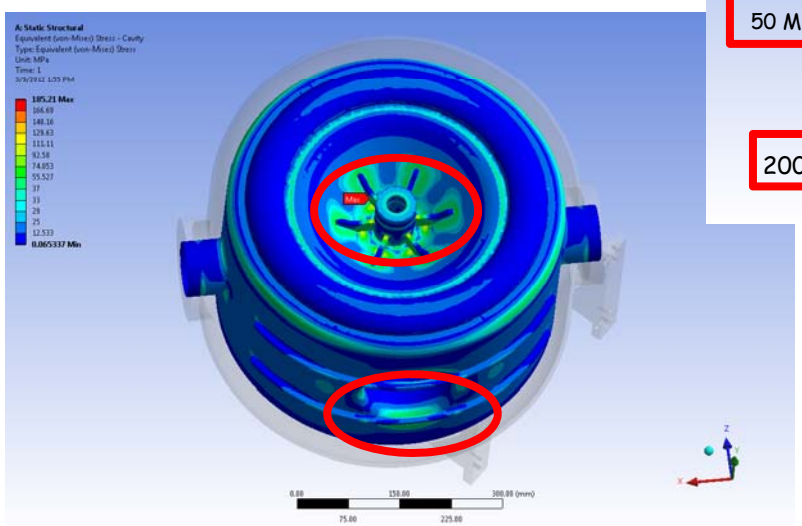

Away from the point of singularities the stresses are under the limit

Protection against plastic collapse
Elastic stress analysis - @ 4K and 4 bar

Elastic material property @ T=4K
Load combination applied: $P+P_s+D$
P = 4 bar
Refined mesh
Condition to satisfy:

$\sigma_{eq} \leq S$

- $S_{Nb} = 200\ MPa$
- $S_{SS316L} = 390\ MPa$

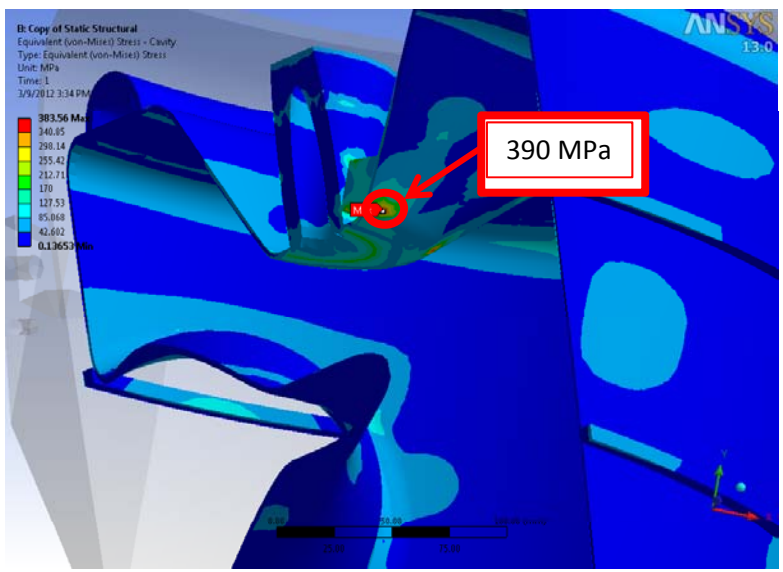

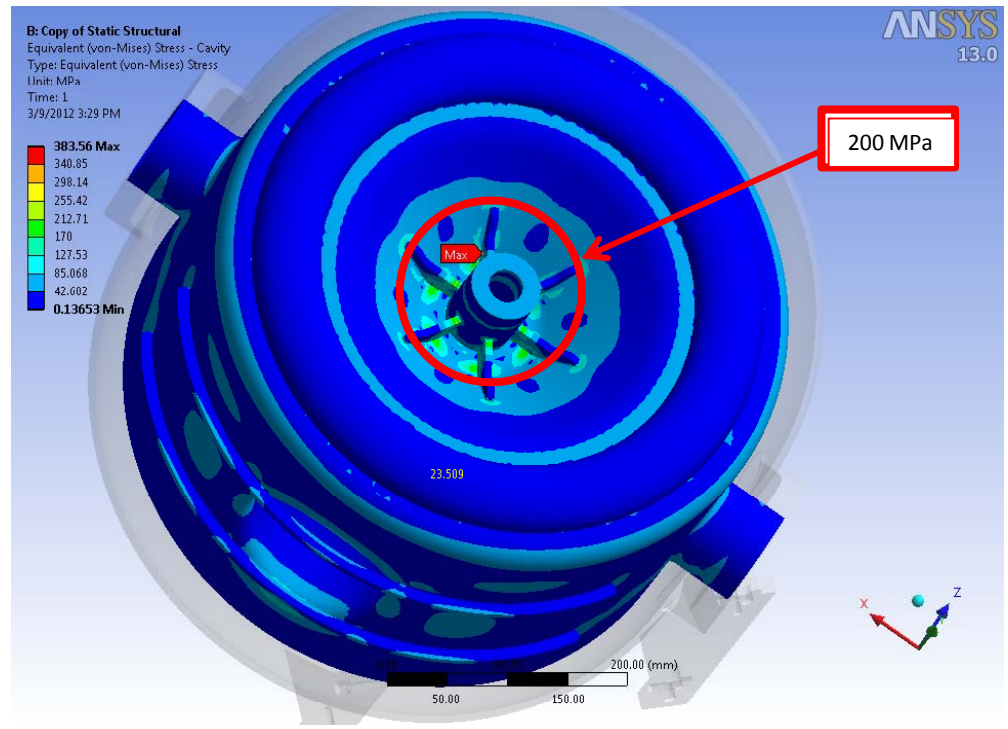

Away from the point of singularities the stresses are under the limit

Protection against plastic collapse
Elastic plastic stress analysis - @ 293K

Elastic plastic material property @ T=293K
Load combination applied: 2.4(P+P_s+D)
"Coarse" mesh

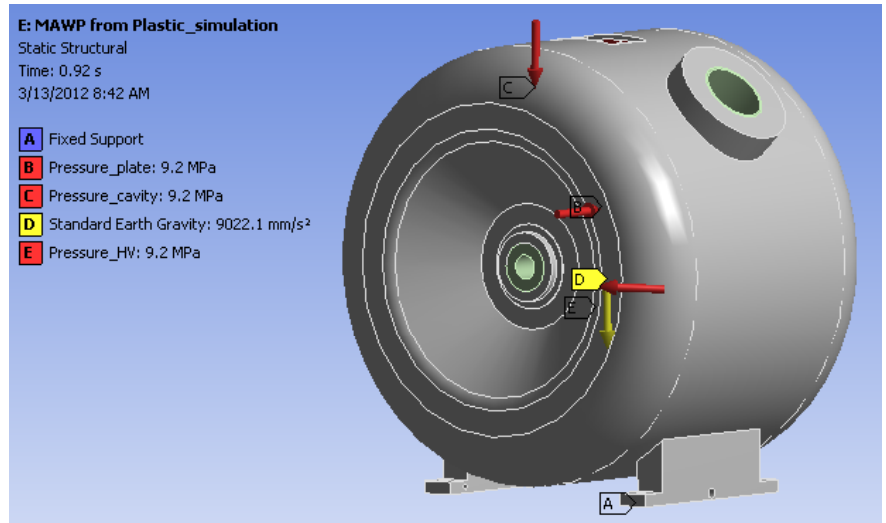


```
TIME OF LAST SOLUTION . . . . . . . . . . 0.53500E-01
   TIME AT START OF THE LOAD STEP . . . .  0.0000
   TIME AT END OF THE LOAD STEP . . . . .  1.0000
NOTE: FOR CONVERGING SOLUTIONS, ADDITIONAL EQUILIBRIUM ITERATIONS MAY BE
      ADDED IN THE RESTART (NEQIT COMMAND) USING THE RESTART FILE
```

Pressure of last solution.....5.35bar

$$MAWP = \frac{5.35}{2.4} = 2.23bar$$

Protection against plastic collapse
Elastic plastic stress analysis - @ 4K

Elastic plastic material property @ T=4K
Load combination applied: 2.1(P+P_s+D+T)
"Coarse" mesh

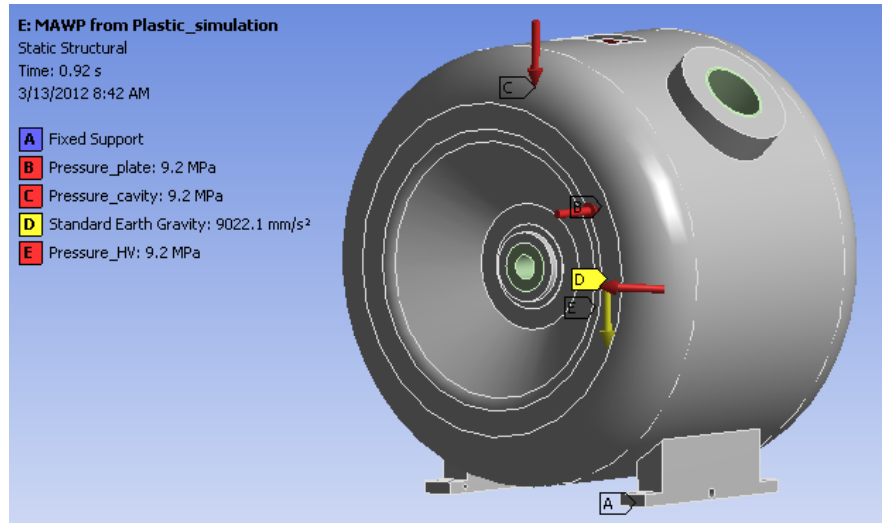

Pressure of last solution.....6.3bar

$$MAWP = \frac{6.3}{2.1} = 3bar$$ (not finalized results)

Simulation under study

Conclusion

- We have defined a procedure to check the mechanical performances of the dressed SSR1 cavity in agreement with “ES&H Fermilab manual” and “2010 ASME Boiler and Pressure Vessel Code”.
- The simulations to assure the protection against plastic collapse are running and the first “coarse” results are encouraging.
- In 15 days we should be able to show more finalized results.

THANKS!