325 MHz Main Power coupler status

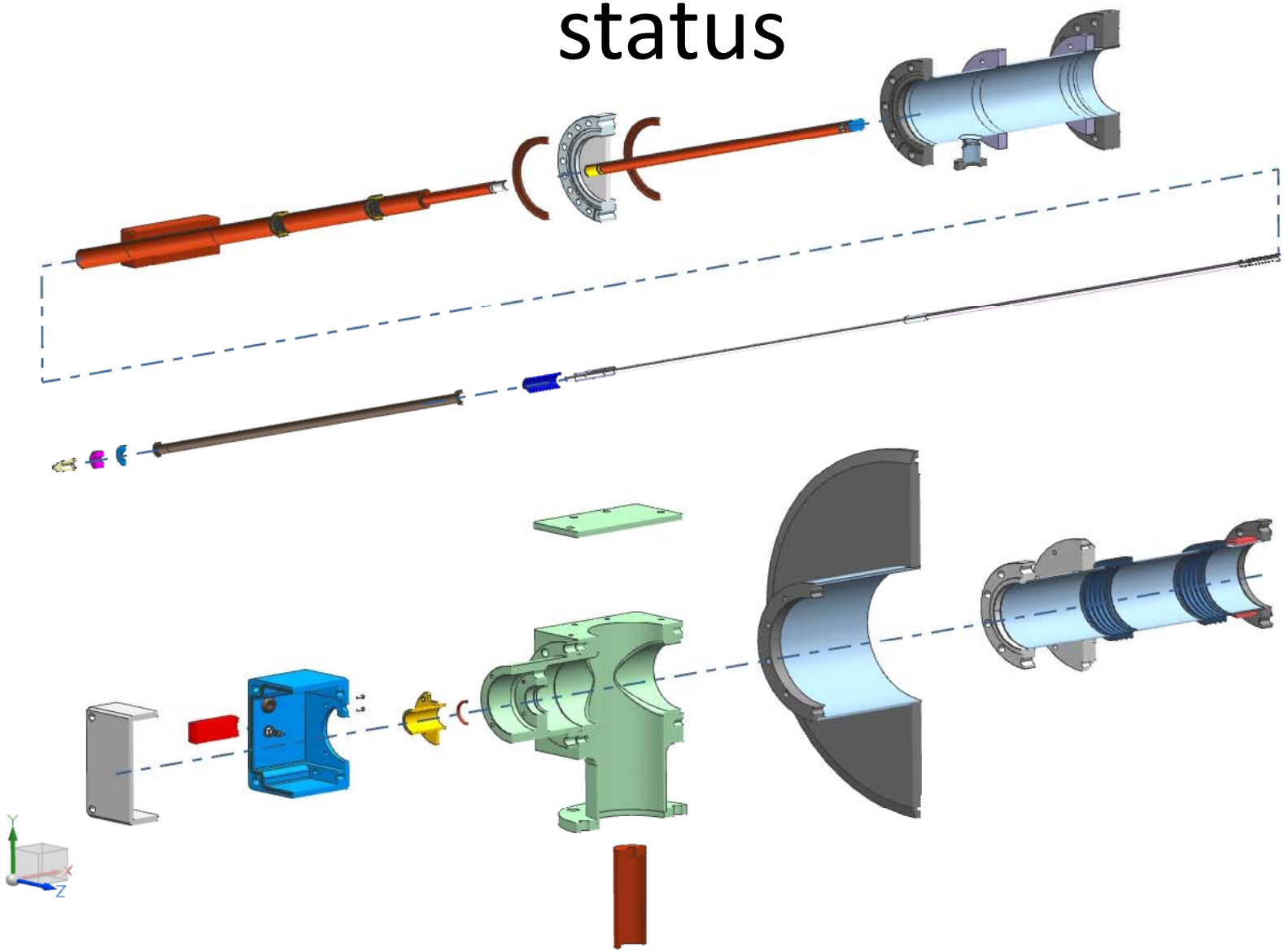

325 MHz Main Power coupler production steps

- **Manufacturing**
  - Create purchase requisitions for Cold End Assembly and bellows assemblies
  - Send out request for quotation
  - Review quotes and choose vendor
  - Review ceramic joint specification from vendor
  - Update drawings if necessary
  - Get ceramic sample for RF measurement - 4-5 weeks
  - Proceed with manufacturing - 9 weeks
  - Order rest of the coupler components
  - Receive, inspect and test parts

325 MHz Main Power coupler production steps

- **Inspection**
  - Mechanical inspection of all parts
  - Pressure test and leak check Cold End Assembly 483985
  - Leak check Warm Tube Assembly 484007
- **Processing and assembly**
  - Ultrasonic cleaning of all Cold End Assembly 483985 components
  - Clean room assembly and 200 C baking of Cold End Assembly 483985
  - Assembly of Warm End parts
- **Test**
  - HV test
  - High power test

Parts on order

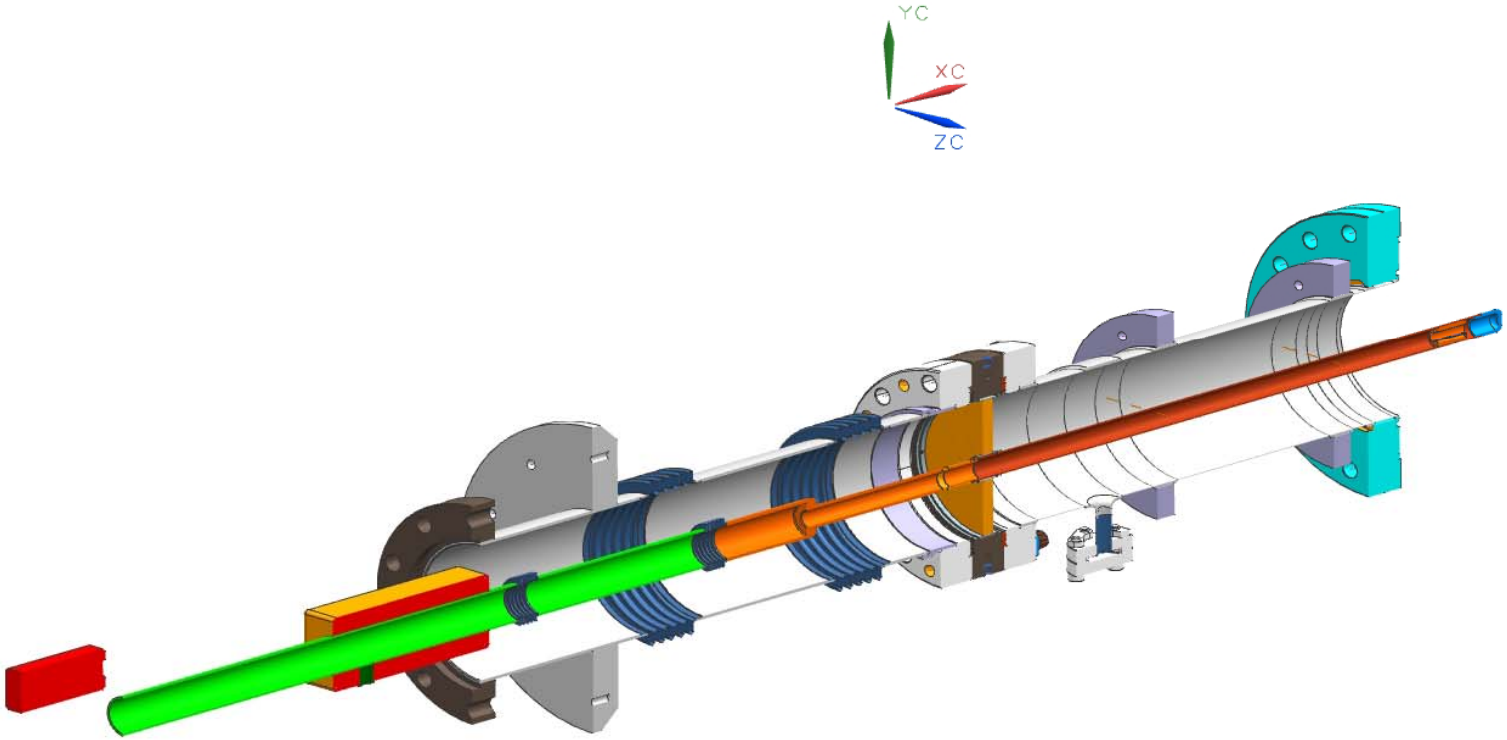

Parts that needs to be ordered

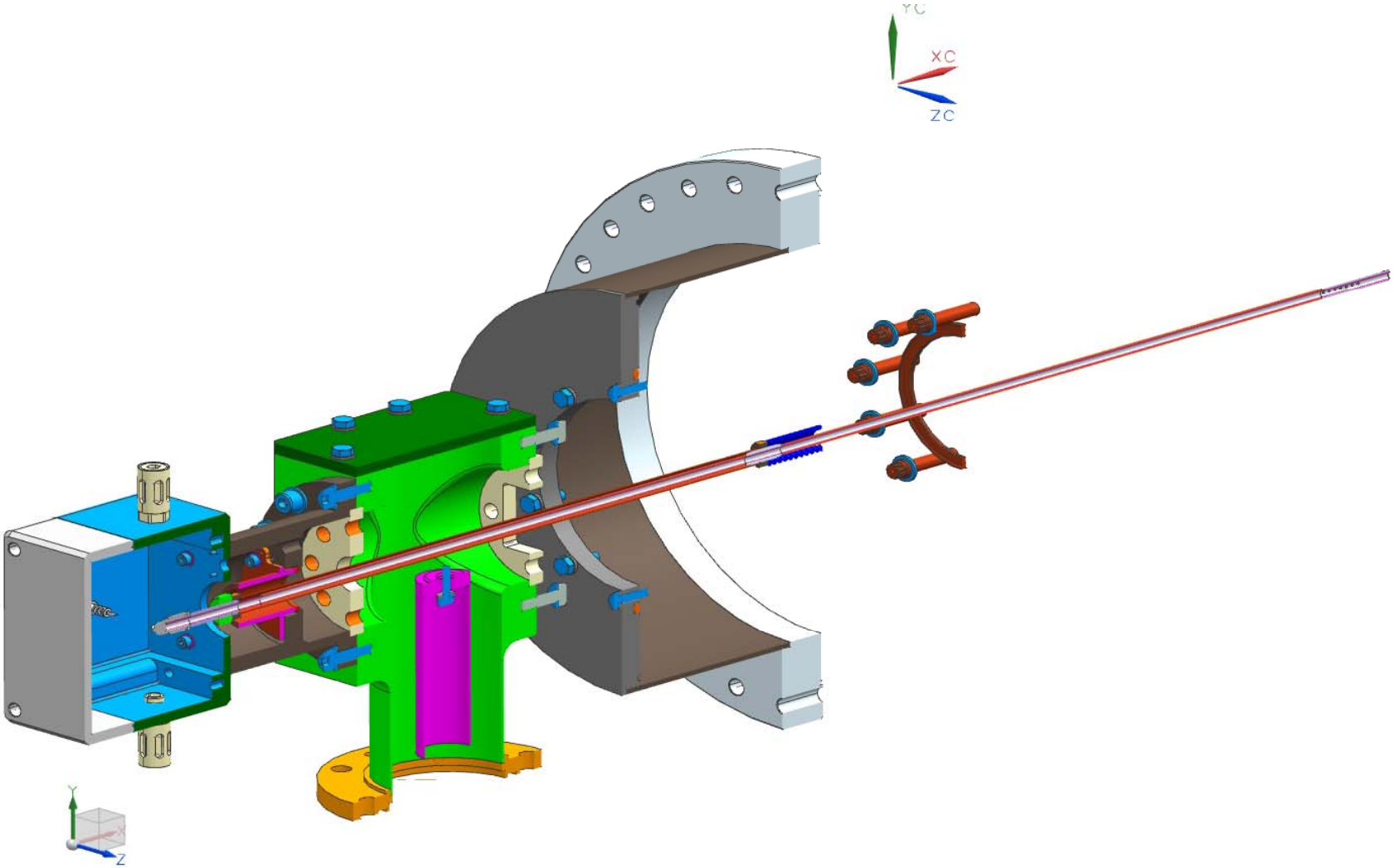

Ceramic Test tube

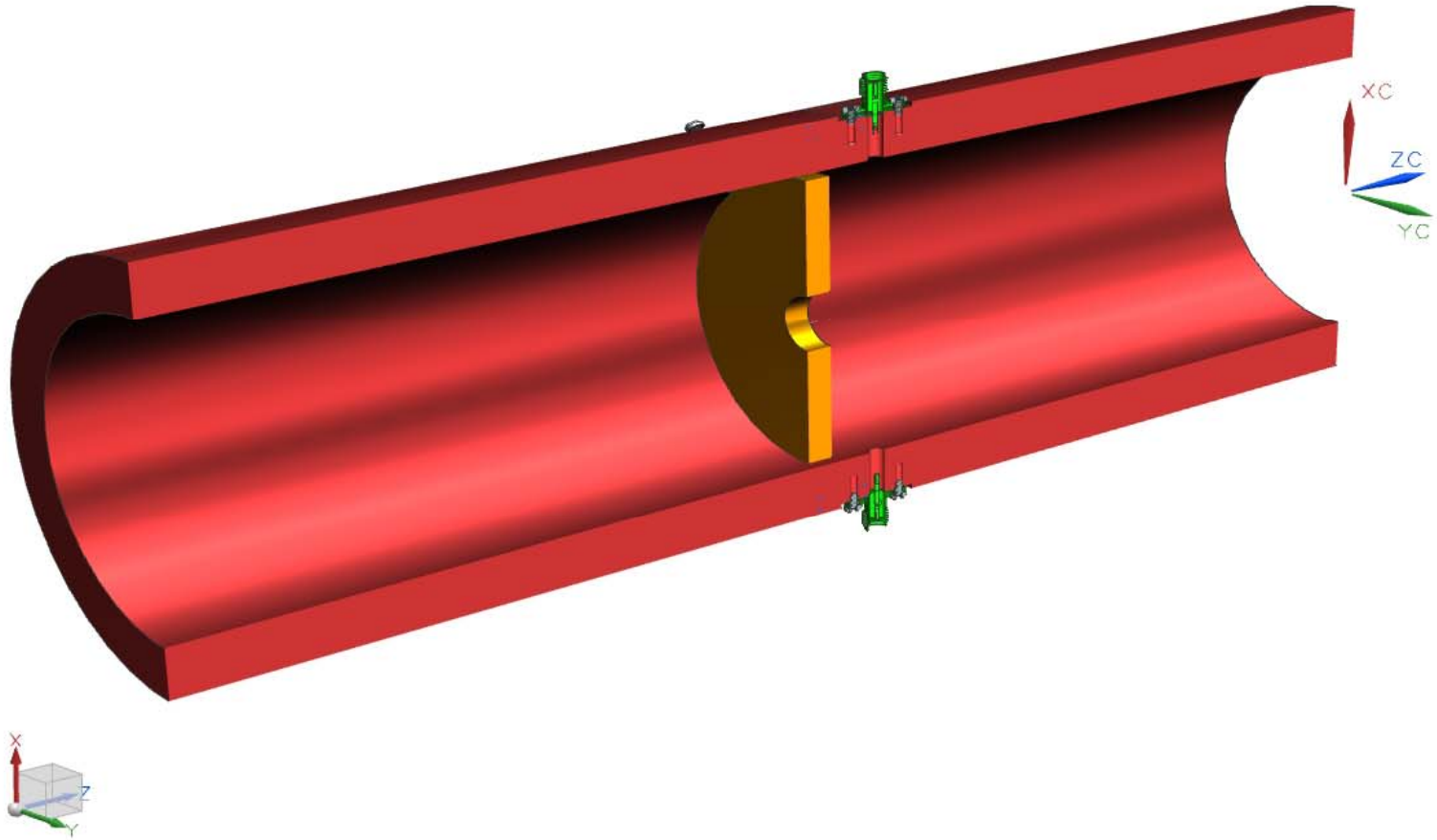

Coupler Ceramic Window Changes

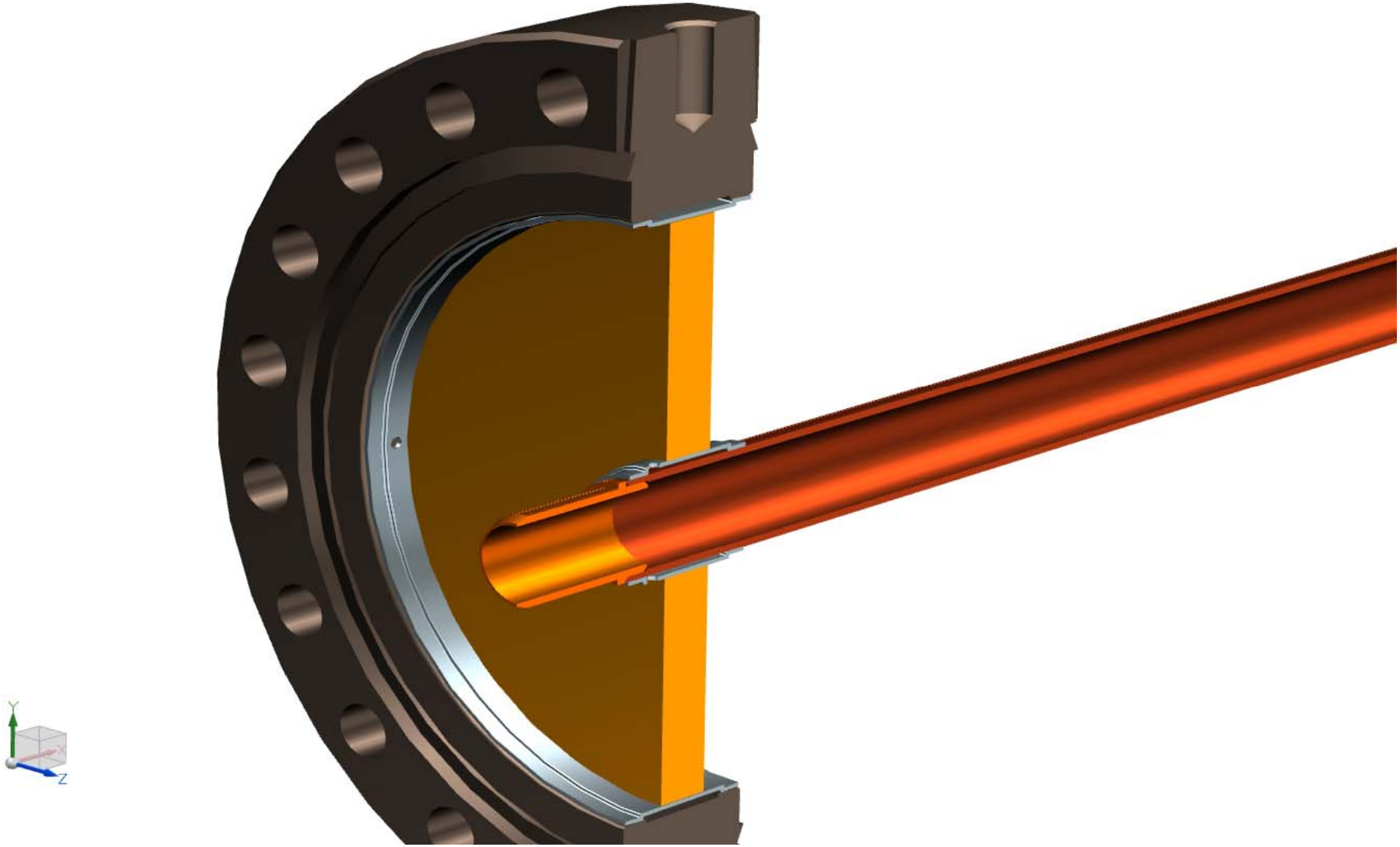

Add copper sleeves on ID and OD of ceramic disc 482414

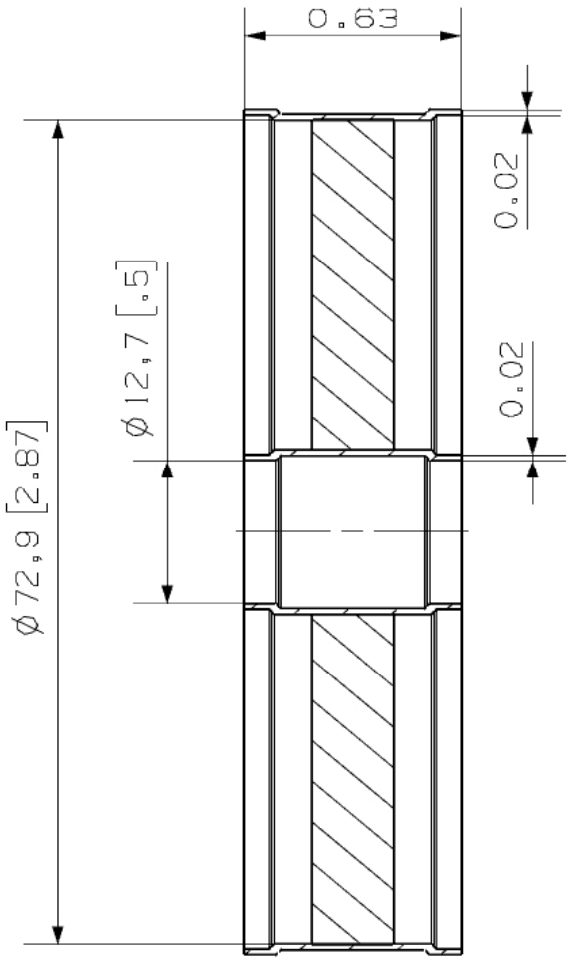

- Keep OD dimension of the ceramic disc 482414 the same (72.8 mm)
- Change ID dimension of the ceramic disc 482414 to compensate for copper sleeve, keeping ID of the sleeve 12.7 mm(.5”)

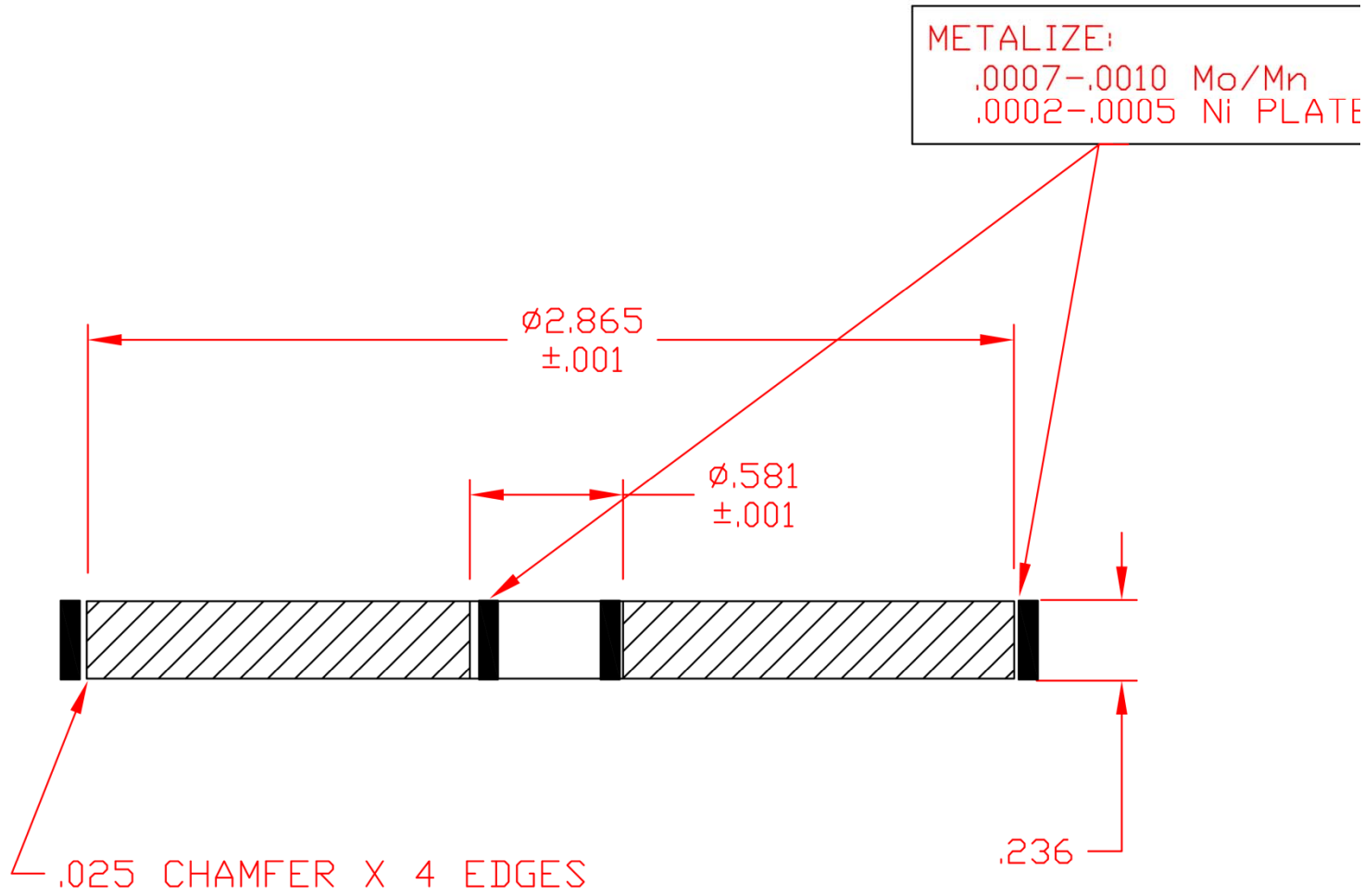

NOTE: 1. MATL: 99.5% MIN. DIELECTRIC ε =9.8 + 0.2 − 0.4.
DISSIPATION TANG δ <10e−4 @ RT.
2. 1000−1500°C AIR FIRE FOR ONE HOUR BEFORE METALIZING.

© OMLEY INDUSTRIES, INC., 2012

TOLERANCES UNLESS OTHERWISE SPECIFIED
2 PLACE (.XX) ±01 PARALLELISM ±.002

OMLEY INDUSTRIES, IN
GRANTS PASS, OREGON

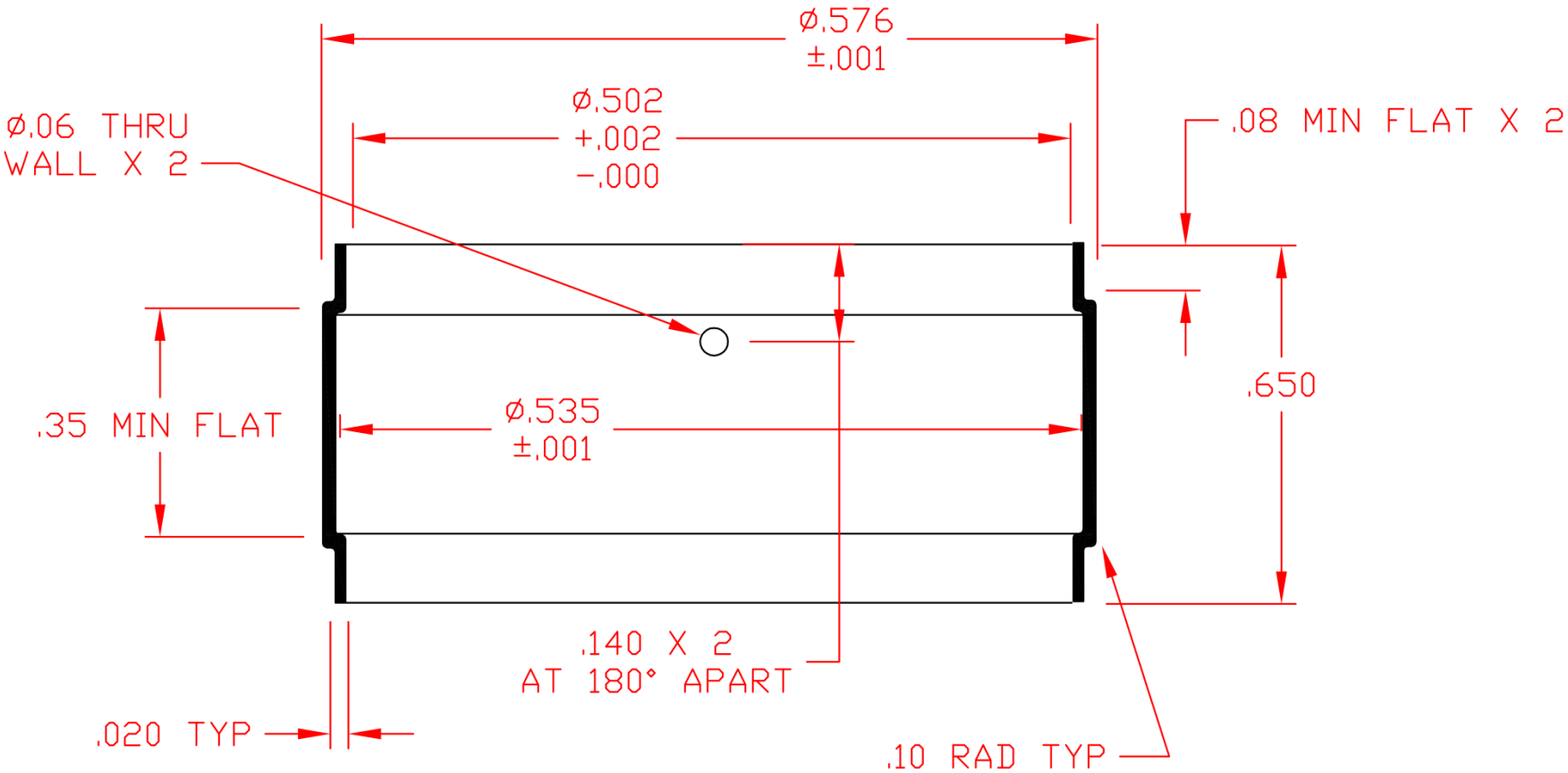

© OMLEY INDUSTRIES, INC., 2012

TOLERANCES UNLESS OTHERWISE SPECIFIED
2 PLACE (.XX) ±01 PARALLELISM ±.002

OMLEY INDUSTRIES, IN
GRANTS PASS, OREGON

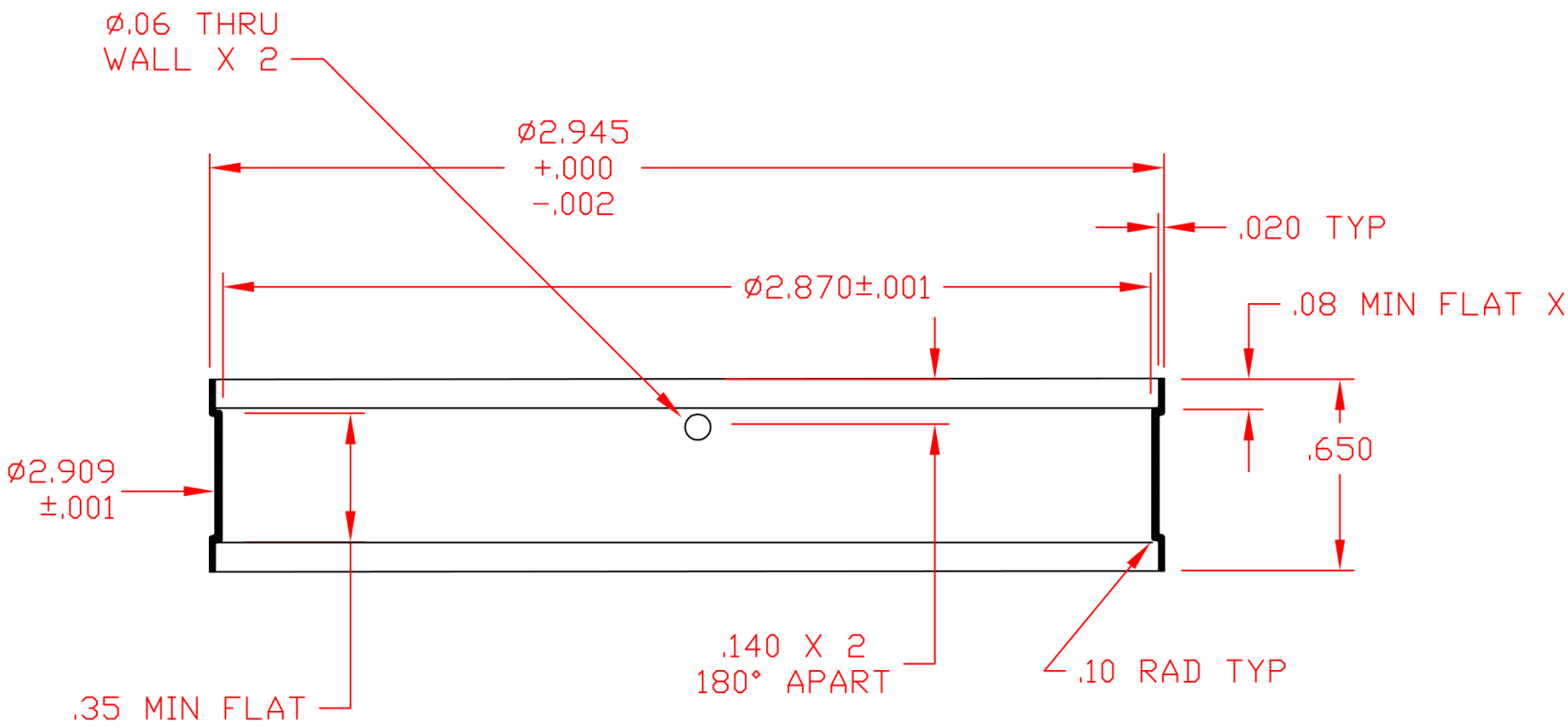

© OMLEY INDUSTRIES, INC., 2012

TOLERANCES UNLESS OTHERWISE SPECIFIED
2 PLACE (.XX) ±01 PARALLELISM ±.002

OMLEY INDUSTRIES, IN
GRANTS PASS, OREGON

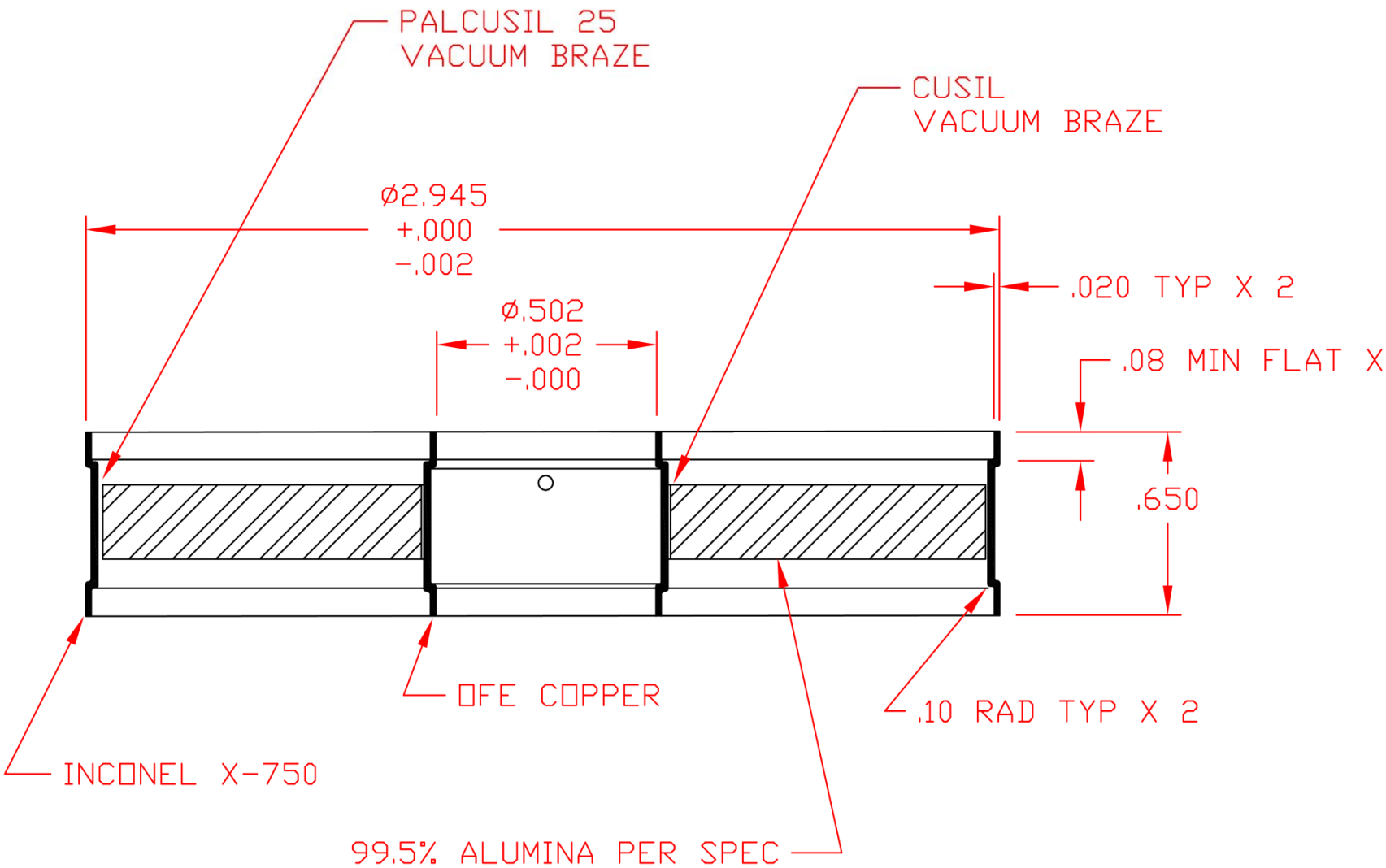

© OMLEY INDUSTRIES, INC., 2012

TOLERANCES UNLESS OTHERWISE SPECIFIED
2 PLACE (.XX) ±01 PARALLELISM ±.002

OMLEY INDUSTRIES, IN
GRANTS PASS, OREGON

FNAL Requisition Report

Fermilab Business Services

Requisition No.	Prepared By	Date Entered	Request Originator
234062	KARAU, BETH	4/26/12	SCHMIDT, MARSHA

Approval Status	Awaiting
RETURNED	KARAU,BETH

Description of Entire Requisition
Project X - Cryomodule MB 483985 Cold End Assy

Note to Approver

Deliver To Person	Deliver to Location	Note to Buyer
SCHMIDT, MARSHA	IB4	

Suggested Vendor	Suggested Vendor Site	Suggested Vendor Contact	Suggested Vendor Phone

Reference #	Need By Date
	10-Jun-12

Note To Receiver

Justification (To Approver)

Total of Requisition
$73,600.00

Requisition Lines

Line#	Description/Category	Qty	U/M	Unit Price	Ext. Price	PO Number Buyer/Ext.
1-	MB 483985 Rev "B", Cold End Assembly. Assoc Drwgs: MC 484063, MB 483989 B, MB 484079, MB 483987 A, MB 483988, MB 482421, MB 482707, MB 482419 A, MB 483992 A, MB 482414, MB 482415 A, MB 484074 A, MB 483718 B, MB 482653 A, MB 483994 FABRICATIONS **Project** Project X Pre-CD-0 New WBS , **Task** 325MHz Cav-CryoMod , **Task Number** 120A.02.04.02 **Exp. Org** TD - QUALITY AND MATERIALS DEPARTMENT, **Exp. Type** FABRICATION PROCUREMENT **Service Type** OP-PRECD0-PROJECT X	3.00	EACH	$5,700.00	$17,100.00	EVANS x4166
2-	MD 483984 Rev A, Main Coupler (Omit item 1 - MB 483985 and Item 4 on MB 484051. Also item 26 MB 484190 requires only 1 piece not 4) FABRICATIONS **Project** Project X Pre-CD-0 New WBS , **Task** 325MHz Cav-CryoMod , **Task Number** 120A.02.04.02 **Exp. Org** TD - QUALITY AND MATERIALS DEPARTMENT, **Exp. Type** FABRICATION PROCUREMENT **Service Type** OP-PRECD0-PROJECT X	3.00	EACH	$18,000.00	$54,000.00	EVANS x4166

Approval History

Date/Time	Action	Who	Note
13-Jul-2012	RETURN	EVANS	See Marsha for disposition
18-Jun-2012	APPROVE	WILEY	ALL REQUIRED APPROVALS RECEIVED
18-Jun-2012	FORWARD	WILEY	GATEKEEPER
18-Jun-2012	NO ACTION	HALL	
18-Jun-2012	FORWARD	KARAU	
18-Jun-2012	SUBMIT	KARAU	Please return to Ron Evans
15-Jun-2012	SUBMIT	KARAU	Added more drawings, no change to dollars, back to Ron Evans
15-Jun-2012	RESERVE	KARAU	
07-Jun-2012	RETURN	EVANS	See Marsha for modifications
22-May-2012	APPROVE	HALL	ALL REQUIRED APPROVALS RECEIVED.
22-May-2012	APPROVE	HENDERSON	
21-May-2012	FORWARD	GROMMES	For your online approval; then "Approve and Foward" on to Joanne Hall, please.
21-May-2012	APPROVE	KARAU	Offline Approval: S. Yakovlev and M. Kaducak / Project 120A
17-May-2012	FORWARD	COBB	DISTRIBUTION CHANGE APPROVED BY S. NAGAITSEV / TD APPROVALS REQUIRED
17-May-2012	FORWARD	KARAU	
17-May-2012	SUBMIT	KARAU	Project/Task changed as requested
17-May-2012	RESERVE	KARAU	
17-May-2012	REJECT	COBB	PLEASE CHANGE DISTRIBUTION TO 120A / 120A.02.04.02 PER S. NAGAITSEV / AND RE-SUBMIT FOR APPROVAL
14-May-2012	FORWARD	KARAU	
14-May-2012	SUBMIT	KARAU	Quantity changed as requested
14-May-2012	RESERVE	KARAU	
14-May-2012	REJECT	COBB	RETURN TO TD PER B. KARAU FOR QUANTITY CHANGE
11-May-2012	FORWARD	KARAU	
11-May-2012	SUBMIT	KARAU	Made revision changes and added Spec # / Need re-approval for adding line 2&3
11-May-2012	RESERVE	KARAU	
11-May-2012	REJECT	COBB	RETURN TO TD PER B. KARAU
11-May-2012	FORWARD	KARAU	
11-May-2012	SUBMIT	KARAU	Change made as requested
11-May-2012	RESERVE	KARAU	
11-May-2012	REJECT	COBB	RETURN FOR DESCRIPTION CHANGE TO PROJECT X PER M. SCHMIDT
09-May-2012	FORWARD	KARAU	
09-May-2012	SUBMIT	KARAU	Need Re-Approvals, Line 2 and 3 added
09-May-2012	RESERVE	KARAU	
09-May-2012	RETURN	EVANS	See Marsha for required changes
01-May-2012	APPROVE	HALL	ALL REQUIRED APPROVALS RECEIVED.
01-May-2012	FORWARD	CONGER	
30-Apr-2012	APPROVE	SMITH	All Project X mgmt approvals have been obtained. >10K reqs need C. Conger review.
27-Apr-2012	APPROVE	HOLMES	
27-Apr-2012	FORWARD	FETZNER	Approved / J. Steimel for S. Nagaitsev
26-Apr-2012	FORWARD	COBB	
26-Apr-2012	FORWARD	KARAU	
26-Apr-2012	SUBMIT	KARAU	Need approvals for Project 120A
26-Apr-2012	RESERVE	KARAU	

FNAL Requisition Report — Fermilab Business Services

Requisition No.	Prepared By	Date Entered	Request Originator
235916	KARAU, BETH	7/20/12	SCHMIDT, MARSHA

Approval Status	Awaiting
APPROVED	COMPLETE

Description of Entire Requisition
MC 484007, Warm Tube Assembly

Note to Approver

Deliver To Person	Deliver to Location	Note to Buyer
SCHMIDT, MARSHA	IB4	

Suggested Vendor	Suggested Vendor Site	Suggested Vendor Contact	Suggested Vendor Phone

Reference #	Need By Date
	12-Oct-12

Note To Receiver

Justification (To Approver)

Total of Requisition
$36,150.00

Requisition Lines

Line#	Description/Category	Qty	U/M	Unit Price	Ext. Price	PO Number Buyer/Ext.
1-1	MC 484007, Rev "B", Warm Tube Assembly, Assoc. Drawings: MB 484008, MB 484009, MB 484010, MB 484011, MB 482642, MB 484040, MB 484077 A, MB 482419 A, Spec ES 371114 FABRICATIONS **Project** Project X Pre-CD-0 New WBS , **Task** CWL Facility @ MDB , **Task Number** 120A.02.06.01 **Exp. Org** TD - QUALITY AND MATERIALS DEPARTMENT, **Exp. Type** FABRICATION PROCUREMENT **Service Type** OP-PRECD0-PROJECT X	3.00	EACH	$7,709.00	$23,127.00	608601 EVANS x4166
2-2	MB 484019 Rev "A", Antenna Assy - Warm End. Assoc. Drawings: MB 484020, MB 484021, MB 484022, MB 484023, MB 484075 A, and MB483991 FABRICATIONS **Project** Project X Pre-CD-0 New WBS , **Task** CWL Facility @ MDB , **Task Number** 120A.02.06.01 **Exp. Org** TD - QUALITY AND MATERIALS DEPARTMENT, **Exp. Type** FABRICATION PROCUREMENT **Service Type** OP-PRECD0-PROJECT X	3.00	EACH	$4,341.00	$13,023.00	608601 EVANS x4166

FNAL Purchase Order Inquiry — Fermilab Business Services

FERMI RESEARCH ALLIANCE, LLC
FERMI NATIONAL ACCELERATOR LABORATORY
P.O. BOX 500 BATAVIA, ILLINOIS 60510
AREA CODE 630 840-3000

STANDARD PURCHASE ORDER NO. 608601
Status: APPROVED Reprints 1

OMLEY INDUSTRIES INC
150 CORPORATE WAY
GRANTS PASS, OR 97526

SHIP TO FERMILAB
RECEIVING WAREHOUSE 2
KIRK RD & WILSON STREET
BATAVIA, IL 60510 US

BILL TO FERMILAB
ACCOUNTS PAYABLE
PO BOX 500
BATAVIA, IL 60510 US

ORDER DATE	BUYER	TERMS:	F.O.B.	SHIP VIA:
21-Sep-2012	REVANS	FROM RECEIPT OF GOODS OR INVOICE, WHICHEVER IS LATER	Shipping Point	VENDORS CHOICE

Line	Item Description	Qty	U/M	Unit Price	Ext. Price	Work Pkg-CE	Req Number(s)
1	**MC 484007, Rev "B", Warm Tube Assembly, Assoc. Drawings: MB 484008, MB 484009, MB 484010, MB 484011, MB 482642, MB 484040, MB 484077 A, MB 482419 A, Spec ES 371114** **Promised Date: 30-Nov-2012** **Deliver To: SCHMIDT, MARSHA E** **Project** Project X Pre-CD-0 New WBS **Task** CWL Facility @ MDB **Task Number** 120A.02.06.01 **Exp. Org** TD - QUALITY AND MATERIALS DEPARTMENT **Exp. Type** FABRICATION PROCUREMENT **Task Org** DO - SPECIAL PROJECTS **Service Type** OP-PRECD0-PROJECT X	3.00	EACH	7,709.00	23,127.00	00000-77	235916
2	**MB 484019 Rev "A", Antenna Assy - Warm End. Assoc. Drawings: MB 484020, MB 484021, MB 484022, MB 484023, MB 484075 A, and MB483991** **Promised Date: 30-Nov-2012** **Deliver To: SCHMIDT, MARSHA E** **Project** Project X Pre-CD-0 New WBS **Task** CWL Facility @ MDB **Task Number** 120A.02.06.01 **Exp. Org** TD - QUALITY AND MATERIALS DEPARTMENT **Exp. Type** FABRICATION PROCUREMENT **Task Org** DO - SPECIAL PROJECTS **Service Type** OP-PRECD0-PROJECT X	3.00	EACH	4,341.00	13,023.00	00000-77	235916

PO Total: 36,150.00

Approval History

DATE	ACTION	WHO	NOTE
21-Sep-2012	APPROVE	EVANS	
21-Sep-2012	RESERVE	EVANS	
21-Sep-2012	SUBMIT	EVANS	