Specification Project:FERMI-1

DRAFT B

DOCUMENT INFORMATION

Document Information	
Title	Specification Project:FERMI-1
Document No.	
Revision	B
Release Date	PRELIMINARY
Quotation No.	No –X or later revision
Classification	RESTRICTED

This document is a draft unless approved. The master of this document is available from Phytron Elektronik GmbH.

© Copyright 2012 by Phytron Elektronik GmbH

This document contains proprietary information of Phytron Elektronik GmbH. The information in this document shall not be reproduced or disclosed to third parties without written authorisation of an officer of Phytron Elektronik GmbH. The content is confidential.

DOCUMENT HISTORY

Change Record (Changes are recorded with the MS-Word change functionality to the last revision)			
Rev.	Date	Author	Change Description
A	17.04.2012	JS	first internal draft
B	23.04.2012	JS, DT	first draft

DOCUMENT APPROVAL

Document Approval (Phytron)			
	Date	Function	Initials
Author	23.04.2012	MEL	JS
Release		TL, MEL	
Quality Management	N/A	N/A	N/A

DRAFT B

INFORMATION

INFORMATION CONCERNING THIS SPECIFICATION	
CUSTOMER	customer's address
BASIS FOR THIS SPECIFICATION	**REFERENCE DOCUMENTS** [1] miscellaneous Emails [2] telecom 05.04.2012
EXPLENATION OF THIS SPECIFICATION	**column: "required value":** Customer's requirements are copied 1:1 to this column of the specification. A reference to the source of the requirement is given by [1] ... **column: "offered solution":** Phytron inserts the technical data that is feasible for Phytron to do. If the customer's requirement cannot be met, Phytron will add "TBC by customer" in the column "change/stat". Phytron's offering always refers to this column. Before Phytron can create a final quotation all "TBC by customer" need to be discussed with the customer, a solution needs to be agreed on, and the "TBC" needs to be deleted from this specification. **column: "change/stat":** This column indicates that the line of the specification needs to be checked by the customer. If "TBC by customer" is written in this column, Phytron for example does not meet the required value, or has changed a value in the column "offered solution" If lines have been updated from one to the next revision, it is also indicated in this column. For example like: "Updated in Rev.B"
CHANGE RECORD	Any time the document is shared with the customer, it is revised. In the early phase Phytron uses capital letters for the revision (starting with A, B, C,...). As soon as all "TBC" are deleted from this specification the revision is changed to numbers (starting with 1, 2, 3,...). Phytron indicates the changes to the former revision of the specification by using the "MS Word change functionality". So all changes can be identified.

DRAFT B

CONTENT

1 PROJECT DESCRIPTION 6
1.1 BRIEF INTRODUCTION INTO THE PROJECT: 6
1.2 REQUIRED QUANTITIES: 7
1.3 PROJECT MILESTONES: 7
2 CONCEPT DESCRIPTION 8
2.1 CONCEPT ILLUSTRATION 8
2.2 BRIEF TECHNICAL SUMMARY OF THE CONCEPT 8
2.3 PRELIMINARY ICD 9
3 DETAIL SPECIFICATION 10
3.1 MAIN CHARACTERISTICS AND OPERATIONAL DATA 10
3.2 PERFORMANCE AND NON FUNCTIONAL REQUIREMENTS 10
3.3 FUNCTIONAL REQUIREMENTS 11
3.4 INTERFACES 12
3.4.1 ELECTRICAL INTERFACE 12
3.4.2 MECHANICAL INTERFACE 12
3.4.3 ENVIRONMENTAL INTERFACE 12
3.5 PRODUCTION AND ASSEMBLY REQUIREMENTS 13
3.6 LIFE CYCLE OF PRODUCT 13
3.6.1 INITIATION 13
3.6.2 OPERATION 13
3.6.3 MAINTENANCE 13
3.7 HANDLING AND STORAGE 14
3.8 IDENTIFICATION 14
3.9 SHIPMENT 14
4 DELIVERABLES AND DOCUMENTATION 14
5 PROJECT PHASE-1 : PROTOTYPES 15
5.1 DOCUMENTATION AND TESTS FOR PROTOTYPES : 15
5.1.1 INITIAL INSPECTIONS BEFORE ASSEMBLING 15
5.1.2 ELECTRICAL TESTS 15
5.1.3 DYNAMICAL TESTS 15
5.1.4 OPERATING TIME / CYCLE RECORD 16
5.1.5 MECHANICAL TESTS 16

DRAFT B

5.1.6 OUTGASSING PROCEDURES 17
5.1.7 SURFACE PREPARATIONS 17
5.1.8 VIBRATION TESTS 17
5.1.9 THERMAL TESTS 17
5.1.10 RADIATION TEST 17
5.1.11 LIFETIME TEST 18
5.1.12 CLEANING AND PACKAGING 18
5.1.13 POST INSPECTION AFTER TESTS / LIFETIME 18
5.2 TEST SEQUENCE / TEST MATRIX FOR PROTOTYPES 19
5.3 PROJECT SCHEDULE: 23
6 APPENDIX 23

DRAFT B

1 PROJECT DESCRIPTION

1.1 BRIEF INTRODUCTION INTO THE PROJECT:

A new accelerator facility will be built at FERMI National Accelerator Laboratory. For the frequency adjustment in the cavities some actuators are necessary.

The planned stepper motor actuators based mainly on the actuators which were developed and successful tested in 2008 for the DESY project (Hamburg, Germany). Some smaller changes must be implemented in a modified design due to a higher axial load capacity and some other material changes.

In the moment the project should proceed in 3 main steps. At first, PHYTRON delivers three versions of prototypes. We suggest 2+2+2 = 6 systems in total. Differences are in the tribological characteristics of the spindle material and coatings. One piece for the lifetime test and another one for reference.

One system will use a non hardened, non-magnetic stainless steel version with a coating and a dry lubrication, second system will use a titanium based version and the third one is a CuBe spindle system. Last one is not preferred but a necessity fall back strategy.

The DESY actuator was tested under 120 N axial load. In the FERMI project we must move 1,300 N. Different non-magnetic spindle materials and coatings must be tested now. We will point out, that we cannot guarantee the 1,300 N in a first step. Lifetime performance and the real resolution must be tested also. No hard friction values are available for these combinations.

The technical risks are the unknown efficiency based on the coefficient of friction (COF) between nut and spindle. A possible delamination between coating and base material is another critical point. The high herzian pressure, differences in the E-module and in the thermal expansion creates further uncertainties. Based on these uncertainties, the load angle of the stepper motor can be affected or with other words, the overall stiffness, repeatability and margin of safety (MOS) must be verified under real conditions. That can create some domino effects like thermal expansion consequences, etc.

Begin of life (BOL) values in the DESY actuator shows a necessary current of 12 %, in relation to the nominal current, to move the 120 N load. Starting current values demonstrate the high efficiency of the system. The unloaded actuator system needs a starting current between 240…..280mA, with 120 N load approx 300 mA at BOL and 450…..500mA at EOL. DESY used a 2,5A winding system. So, approx 150…200 mA were lost in friction degradation effects. That's a factor of approx. 12.5 in relation to the nominal current. The load factor between DESY and FERMI is 1,300N/120N = 10.8. If we calculate with the same friction characteristic we will need nearly the nominal current to move the high load.

In a second step FERMI must test the friction characteristic of all actuator systems in an representative lifetime test and send the systems afterwards back to PHYTRON. We make an EOL analysis and compare the values with the BOL values to verify the degradation in performance and wear.

Finally FERMI must take a decision for one system. If the performance cannot be reached in the first step, the system must be modified in motor and gear size.

DRAFT B

1.2 REQUIRED QUANTITIES:

	Proto-types	Series
required quantity	2+2+2	800

Note: As a minimum requirement of Phytron, at least some prototypes needs to be build and successfully tested.

1.3 PROJECT MILESTONES:

Project Milestones	applicable
Phytron to create this specification	X
Project Meeting, TeleCon or WebCon with customer to create a clear understanding of the customer's requirements and Phytron's offered solution	X
Phytron to finalize this specification. Approval by TL and MEL	X
Phytron to finalize the quotation for the product described in this specification	X
Customer's order. With the order the latest referred specification is automatically released	X
Phytron to acknowledge the order	X
Phytron to share ICD + 3D step file with customer	X
Customer to approve ICD by signature. Delivery time starts with approved ICD. Phytron orders all parts for the prototypes.	X
Phytron to build prototypes with CoC on this specification	X
Customer to release one version of the prototypes.	X
Phytron to build the series with CoC to the selected prototype.	X

DRAFT B

2 CONCEPT DESCRIPTION

2.1 CONCEPT ILLUSTRATION

The actuator can change the diameter of the middle tuner ring segment. Flexible blades hold the 3 ring systems in a constant distance to each other. Only axial forces will be visible in the spindle- nut system. No additional bending moments will occur.

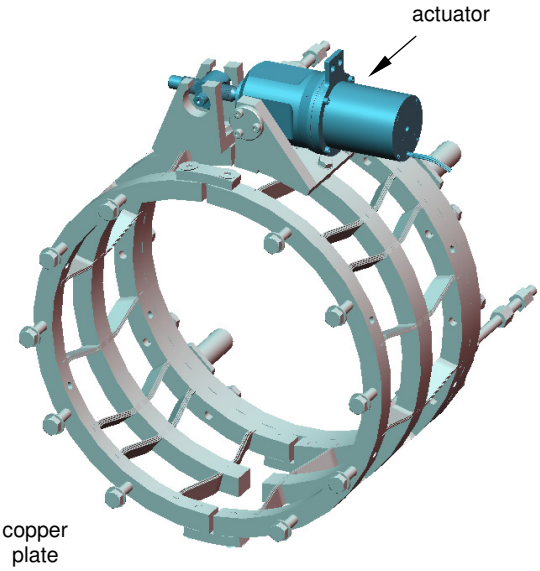

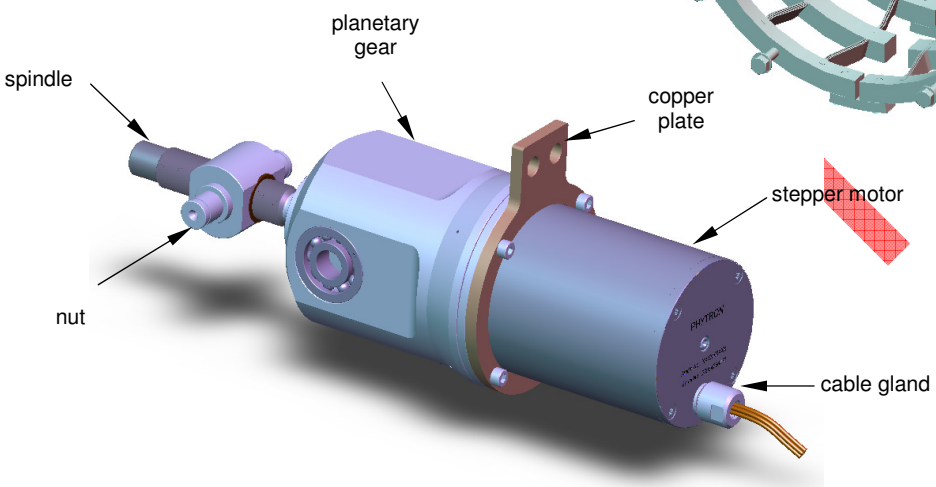

2.2 BRIEF TECHNICAL SUMMARY OF THE CONCEPT

- stepper motor basis VSS 52.200.1,2-4Lp-UHVC-NSSN-X with integrated gear
- 4 Lp winding connection
- lead exit axial, Kapton leads, length 500 mm, AWG 22
- thermocouple k-element in the normal winding, leads 500 mm long
- EMV cable shielding, 450 mm long
- integrated planetary gear, ratio 50:1, WS_2 dry lubricated, normal backlash
- material for housing, flanges and internal parts stainless steel
- material for spindle must be non-magnetic
- spindle and nut system with M12x1
- special EMV cable gland
- duplex bearing configuration for spindle shaft (O-configuration)
- laser marking with manufacturer, article and serial number at rear flange
- assembling and testing in clean production area (CPA)
- first bake out

Note : In the DESY project the cable shielding was fixed from DESY side with a separated M4 screw inside a internal motor housing thread. That creates more effort during assembling and some small mesh particles. We offer here an integrated high conductive EMV cable gland and deliver directly with a mounted shielding.

DRAFT

2.3 PRELIMINARY ICD

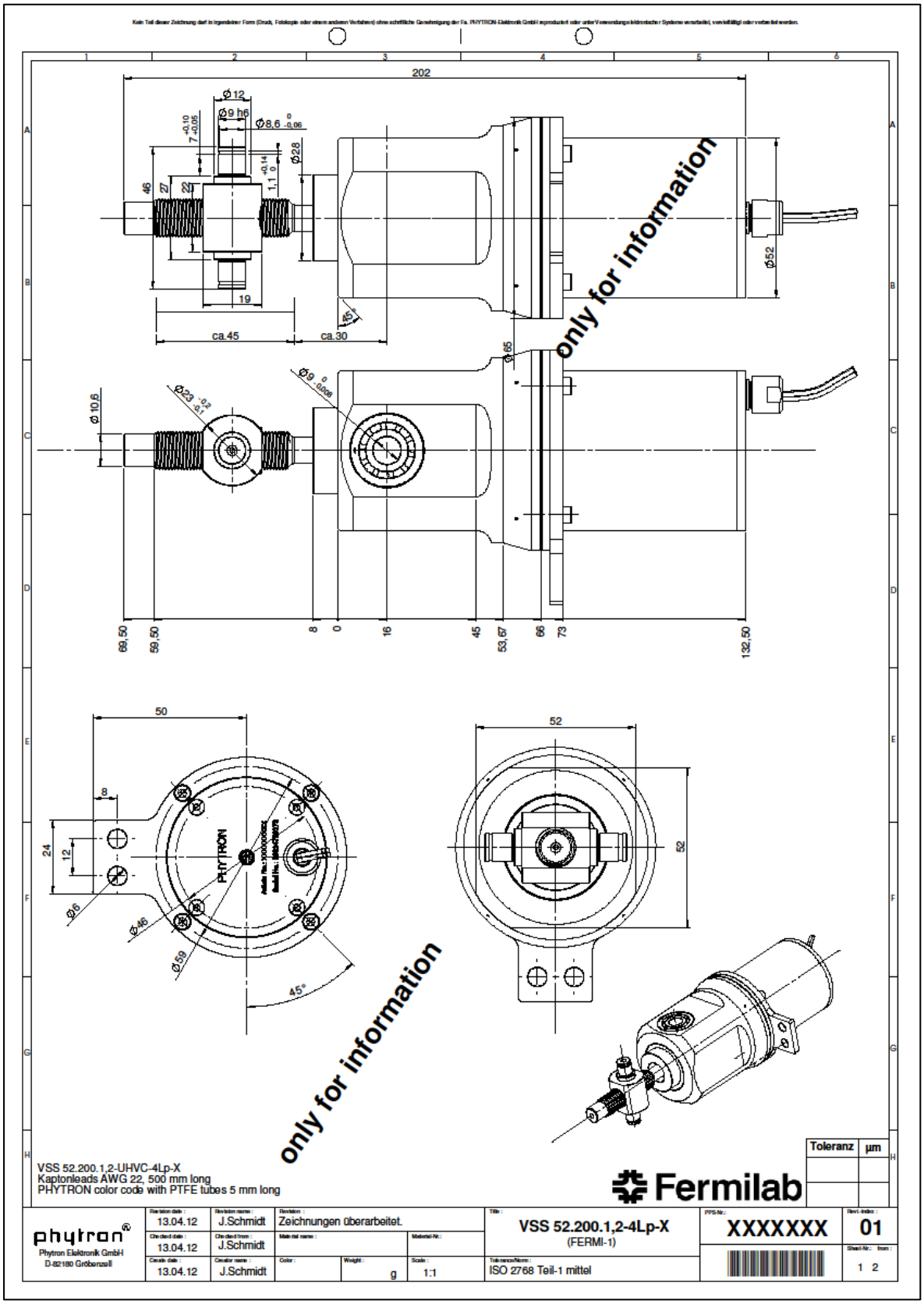

3 DETAIL SPECIFICATION

3.1 MAIN CHARACTERISTICS AND OPERATIONAL DATA

	description	required values	offered solution	change/stat
main characteristics				
	motor type	not specified	VSS 52.200.1,2-4Lp-UHVC-NSSN-X	Rev. A
	step mode	not specified	1/64 micro step, functional testing at PHYTRON with 1/10 mini step	Rev. A
	gear included	not specified	planetary gear	Rev. A
	nominal voltage	not specified	max. 42 V, tested with 20 and 24 V	Rev. A
	nominal phase current	not specified	1.2 A	Rev. A
	max. RPM at gear output shaft	not specified	400 Hz fullstep on motor side	Rev. A
	axial load capacity	max. 1,300 N [1]	o.k., spindle efficiency must be tested in prototype phase	Rev. A

3.2 PERFORMANCE AND NON FUNCTIONAL REQUIREMENTS

	description	required values	offered solution	change/stat
mechanical performance and characteristics				
	resolution	600 nm [2]	with 1/64 micro step mode a theoretical resolution off $1{,}56 \times 10^{-3}$ µm/ministep = 1.56 nm is possible in fullstep mode 99.84 nm	Rev. A
	preload	not specified	no preload between nut and spindle	Rev. A
	motor bearings: type, quality, coating, lubrication	not specified	dry lubrication WS_2	Rev. A
	preload/ bearing constellation	not specified	duplex bearing configuration with lower preload	Rev. A
gear performance				
	gear ratio	not specified	ratio 50:1	Rev. A
	gear lubrication	not specified	dry lubrication WS_2	Rev. A
	backlash	not specified	approx. 35 arcmin, can be electronically compensated by a unidirectional drive process	Rev. A
material				
	material defined	not specified	stainless steel, non-magnetic material for the spindle	Rev. A
	coating defined	not specified	3 different spindle versions will be used for the prototype phase	Rev. A
motor dynamics				
	turning direction	cw, ccw [1]	o.k.	Rev. A

DRAFT

electrical performance and characteristics				
	design voltage	not specified	42 V	Rev. A
	resistance of windings	not specified	~ 0,8 Ω per phase	Rev. A
	inductivity of windings	not specified	~ 2,0 mH per phase	Rev. A
cleanliness				
	EMC	not specified	cable shielding and special EMC cable gland	Rev. A

3.3 FUNCTIONAL REQUIREMENTS

	description	required values	offered solution	change/stat
safety, protective functions				
	protection against corrosion	not specified	all parts of the magnetic circuit are chemically nickel plated	Rev. A
	protection against overheating	not specified	a thermocouple (k-type) will be installed to control the winding temperature. The winding temperature shall not be higher than +130 °C	Rev. A
	out gasing / bakeout	not specified	bake out	Rev. A
	electrical conduction of the motor surface	not specified	conductive surfaces	Rev. A
	surface protection	not specified	o.k.	Rev. A
	grounding mechanism	not specified	o.k.	Rev. A
changeability				
	interchangeability	not specified	o.k.	Rev. A
additional functions				
	cooling with nitrogen flow through	additional cooling copper plate	o.k.	Rev. A
	venting system	not specified	all cavities are open, venting over the cable exit	Rev. A

DRAFT B

3.4 INTERFACES

3.4.1 ELECTRICAL INTERFACE

	description	required values	offered solution	change/stat
electrical connection				
	number of leads	not specified	4 leads motor+ 2 leads for the k-element	Rev. A
	motor connector; motor connector socket	not specified	flying leads, cable gland with shielding	Rev. A
	strain relief	not specified	PHYTRON standard	Rev. A
	lead length	not specified	500 mm, shielding 450 mm	Rev. A
	lead isolation	not specified	kapton	Rev. A
	cable exit	not specified	axial on rear flange, see ICD	Rev. A
	leads color code	not specified	PHYTRON standard	Rev. A
	wiring diagram	not specified	Phytron will provide an ICD drawing	Rev. A

3.4.2 MECHANICAL INTERFACE

	description	required values	offered solution	change/stat
mechanical influence to the Phytron system				
	axial loads	max. 1,300 N in push and pull direction	performance cannot guaran-teed in the prototype phase	Rev. A
	radial loads	no loads, no bending moments	o.k.	Rev. A
motor dimensions				
	max. motor di-ameter	not specified	Phytron will provide an ICD drawing	Rev. A
	max. motor length	not specified	Phytron will provide an ICD drawing	Rev. A
	shaft diameter	not specified	Phytron will provide an ICD drawing	Rev. A
	shaft length	not specified	Phytron will provide an ICD drawing	Rev. A
	shaft connection to system	not specified	Phytron will provide an ICD drawing	Rev. A

3.4.3 ENVIRONMENTAL INTERFACE

	description	required values	offered solution	change/stat
altitude				
	altitude while operation	not specified	o.k.	Rev. A
surrounding medium				
	type of surround-ing medium while operation	vacuum	o.k.	Rev. A
	type of surround-ing medium while testing	vacuum, normal air	o.k.	Rev. A

DRAFT

temperature				
	min./ max. surrounding temperature while operation	-270℃……..+40℃ [1]	PHYTRON can test up to -196℃ in fluid nitrogen	Rev. A
	min./max. surrounding temperature range - non operating	-270℃……..+40℃ [1]	o.k.	Rev. A
pressure				
	min. pressure (while operation)	vacuum	o.k.	Rev. A
	max. pressure (while operation)	ambient	o.k.	Rev. A

3.5 PRODUCTION AND ASSEMBLY REQUIREMENTS

3.6 LIFE CYCLE OF PRODUCT

3.6.1 INITIATION

	description	required values	offered solution	change/stat
	first out-gassing by phytron	not specified	stator bake out	Rev. A

3.6.2 OPERATION

	description	required values	offered solution	change/stat
	lifetime	not specified	o.k., TBV in the lifetime test on customer side	Rev. A
	operation time, duty cycle	very few steps per day, only frequency adjustment	o.k.	Rev. A

3.6.3 MAINTENANCE

	description	required values	offered solution	change/stat
	scheduled preventive maintenance	not specified	o.k.	Rev. A
	operation profiles	not specified	o.k.	Rev. A

DRAFT B

3.7 HANDLING AND STORAGE

	description	required values	offered solution	change/stat
handling				
	cleaning before assembling	not specified	cleanroom condition required	Rev. A
storage				
	min/max ambient temperature during transport	not specified	-50℃ to +70℃	Rev. A
	max. humidity while storage	not specified	cleanroom conditions recommended	Rev. A

3.8 IDENTIFICATION

	description	required values	offered solution	change/stat
	marking	not specified	laser marking on rear flange with manufacturer, article no and serial no	Rev. A

3.9 SHIPMENT

	description	required values	offered solution	change/stat
	packaging	not specified	Phytron standard vacuum packaging with label on the bag	Rev. A

4 DELIVERABLES AND DOCUMENTATION

Document Description		change/stat
	EIDP	Rev A
	interface control drawing (ICD)	Rev A
	CoC from PHYTRON to the specification	Rev A

DRAFT B

5 PROJECT PHASE-1 : PROTOTYPES

5.1 DOCUMENTATION AND TESTS FOR PROTOTYPES :

Phytron will test the motors with the Phytron MCC-2 LIN driver at 24V and/or with the SINCOS driver at 20V.

Type of amplifier : MCC
Voltage : 24 V, different voltages possible with external power supply
Motor current : up to 3,5 A_{peak}, but only in discrete steps
Micro stepping : each fullstep can divided into max 256 micro steps

Type of amplifier : SINCOS
Voltage : 5…..20 V, the supply voltage can be adjusted between 5…..20V via an external power supply
Motor current : up to max. 1,5 A (without cooling), steplessly variable
Micro stepping : each fullstep can divided into 1, 2, 4, 5, 10 or 20 micro steps

5.1.1 INITIAL INSPECTIONS BEFORE ASSEMBLING

Chapter 3.0 in EIDP

Test Name	Detailed Test Description	Acceptance Criteria	change/ stat
microscope inspection	- ambient conditions, CPA - BOL documentation of important surfaces and parts	recorded by Phytron	Rev A

5.1.2 ELECTRICAL TESTS

Chapter 4.0 in EIDP

Test Name	Detailed Test Description	Acceptance Criteria	change/ stat
resistance	- ambient conditions, NPA - resistance of the motor coils are measured	recorded by Phytron	Rev A
inductance	- ambient conditions, NPA - inductance of the motor coils are measured	recorded by Phytron	Rev A
high voltage test	- ambient conditions, NPA - PHYTRON VSS standard (1,500 V, EN 50178 /VDE 0160)	recorded by Phytron	Rev A
thermocouple function test	- ambient conditions, NPA - thermocouple type K (only in EM)	recorded by Phytron	Rev A

5.1.3 DYNAMICAL TESTS

Chapter 5.0 in EIDP

Test Name	Detailed Test Description	Acceptance Criteria	change/ stat
rotation direction check	- normal conditions, CPA - amplifier (SINCOS) - reduced current 0,4 A, 20V - with 2000 Hz 1/10 mini step - check with step sequence table in ICD	rotation CW and rotation CCW	Rev A
detent torque motor (magnetized)	- normal conditions, CPA - not energized - torque sensor 50 Nmm (hold mode)	recorded by Phytron	Rev A

DRAFT B

holding torque motor under nominal current	- normal conditions, CPA - amplifier (MCC-2) - in CW and CCW direction - nominal current 1,2 A, 20V - torque sensor 1,0 Nm (hold mode)	recorded by Phytron	Rev A
starting current motor with gear under ambient	- normal conditions, CPA - amplifier (SINCOS), 20V - with 50 Hz full step - in CW and CCW direction	recorded by Phytron	Rev A
drop down current motor with gear under ambient	- normal conditions, CPA - amplifier (SINCOS), 20V - with 50 Hz full step - in CW and CCW direction	recorded by Phytron	Rev A
starting current motor with gear under low temperature	- fluid nitrogen, CPA - amplifier (SINCOS), 20V - with 50 Hz full step - in CW and CCW direction	recorded by Phytron	Rev A
axial force under ambi-ent	- normal conditions, CPA - amplifier (MCC-2) - current to reach 1,300 N in pull direction - with 4000 Hz in 1/10 mini step - axial force sensor	recorded by Phytron	Rev A

5.1.4 OPERATING TIME / CYCLE RECORD
Chapter 6.0 in EIDP

Test Name	Detailed Test Description	Acceptance Criteria	change/ stat
NOT REQUIRED			

5.1.5 MECHANICAL TESTS
Chapter 7.0 in EIDP

Test Name	Detailed Test Description	Acceptance Criteria	change/ stat
main motor dimensions	- ambient conditions, CPA - measurement and recording of main dimensions - stored inside the ICD dimension table	ICD dimensions	Rev A
axial play at gear shaft	- ambient conditions, CPA - measurement of axial play after duplex bearing adjustment with ~2N	max. 20 µm	Rev A
radial play at gear shaft	- ambient conditions, CPA - measurement of axial play after duplex bearing adjustment with ~2N	max. 20 µm	Rev A
run out gear shaft	- ambient conditions, CPA - measurement of run out after duplex bearing adjustment - motor shaft rotation	max. 20 µm	Rev A
bearing preload (mova-ble bearing at rear motor side)	- ambient conditions, CPA - measurement of axial force	10-20 N	Rev A
length of leads	- ambient conditions, CPA - measurement length of leads	ICD dimensions	Rev A

DRAFT B

5.1.6 OUTGASSING PROCEDURES
Chapter 8.0 in EIDP

Test Name	Detailed Test Description	Acceptance Criteria	change/ stat
bake out	- nitrogen gas flow, NPA - +130°C / 2h - preconditioning stator (bake out)	process performed	Rev A

5.1.7 SURFACE PREPARATIONS
Chapter 9.0 in EIDP

Test Name	Detailed Test Description	Acceptance Criteria	change/ stat
NOT REQUIRED			

5.1.8 VIBRATION TESTS
Chapter 10.0 in EIDP

Test Name	Detailed Test Description	Acceptance Criteria	change/ stat
NOT REQUIRED			

5.1.9 THERMAL TESTS
Chapter 11.0 in EIDP

Test Name	Detailed Test Description	Acceptance Criteria	change/ stat
starting current motor with gear under fluid nitrogen temperature	- fluid nitrogen temperature, CPA - amplifier (SINCOS), 20V - with 50 Hz full step - in CW and CCW direction	recorded by Phytron	Rev A
drop down current motor with gear under fluid nitrogen temperature	- normal conditions, CPA - amplifier (SINCOS), 20V - with 50 Hz full step - in CW and CCW direction	recorded by Phytron	Rev A
axial force under fluid nitrogen temperature	- normal conditions, CPA - amplifier (MCC-2) - current to reach 1,300 N in pull direction - with 4000 Hz in 1/10 mini step - axial force sensor	recorded by Phytron	Rev A

5.1.10 RADIATION TEST
Chapter 12.0 in EIDP

Test Name	Detailed Test Description	Acceptance Criteria	change/ stat
NOT REQUIRED			

DRAFT B

5.1.11 LIFETIME TEST
Chapter 13.0 in EIDP

Test Name	Detailed Test Description	Acceptance Criteria	change/ stat
NOT REQUIRED, WILL BE DONE BY CUSTOMER ON NEXT ASSEMBLY LEVEL			

5.1.12 CLEANING AND PACKAGING
Chapter 14.0 in EIDP

Test Name	Detailed Test Description	Acceptance Criteria	change/ stat
identification and laser marking check	- ambient conditions, CPA	identification done	Rev A
final cleaning	- clean room conditions, CR - assembling in red anodized transport cover - lead fixing - clean packaging - labeling	cleaning process performed	Rev A
packaging	- ambient conditions, NPA - soft foam packaging - documentation - transport papers for shipment	packaging process performed	Rev A

5.1.13 POST INSPECTION AFTER TESTS / LIFETIME
Chapter 15.0 in EIDP

Test Name	Detailed Test Description	Acceptance Criteria	change/ stat
microscope inspection	- ambient conditions, CPA - EOL documentation of important surfaces and parts - BOL/EOL test report	recorded by Phytron	Rev A

DRAFT

5.2 TEST SEQUENCE / TEST MATRIX FOR PROTOTYPES

DEFINITIONS AND CLARIFICATIONS

The assembling steps and the test sequence can be different for each project and don`t follow always the same rules. That can determine that a test must be measured sometimes again in different project phases or process steps. It must be clearly decide between the difference of the test sequence and the process to measure a characteristic value.

PRE OUTGASSING :
At the beginning some of the used parts or subassemblies are pre conditioned in a vacuum chamber to minimize contaminations during the further processes.

INITIAL INSPECTION BEFORE ASSEMBLY :
All inspections like characterizations, measurements, procedures or other checks which can be done before assembling. The measured data and microscope pictures at BOL can be very helpful to understand different processes like degradation after lifetime, tests to compare the parts and surfaces between BOL and EOL.

INITIAL FUNCTION TEST :
All tests in the early assembling phase to evaluate the important characteristic of electrical, physical and mechanical data.

ENVIRONMENTAL TEST :
Meant are all tests which characterize the motor or the complete actuator in the electrical, physical or mechanical performance under specified conditions. The test data can show the effects under these conditions like the increased shear strength of lubrication under lower temperature, aging effects after a radiation dose, etc.

POST ENVIRONMENTAL TESTS :
Is dedicated to compare the test values after the environmental tests to see effects like degradation or stabilization.

VIBRATION :
Can include transportation, random, sinusoidal and single shock spectra.

THERMAL TEST :
In the focus of these test sequence is the thermal behavior or characteristic of the complete energized motor or actuator under defined thermal conditions. In some special cases under inert gas (nitrogen, quality class 5.0). Important can be to know the max. winding temperature in combination with the speed (frequency), the current and the duty cycle or similar heat or warming up curves.

THERMAL VACUUM TESTS :
This covers all tests which have to be done under vacuum conditions between -150°C (123 K) and +180°C (453 K). It can include similar thermal tests as described above if vacuum conditions are required.

POST ENVIRONMENTAL TESTS :
Is dedicated to compare the test values with the values under different conditions. Can be important for the knowledge of MOS.

DRAFT B

FINAL VACUUM CONDITIONING :
Process to reduce the amount of possible condensable material inside vacuum from the final product.

FINAL INSPECTION
Contains some final checks and measurements, the complete final cleaning and packaging.

PACKAGING / TRANSPORTATION
Final cleaning process inside the CR to minimize the surface contaminations. Visual inspection under special light followed by the special packaging procedure. In some cases are special transport covers used.

LIFETIME :
The motor or the complete actuator must be tested under the assumption of a realistic duty cycle and environment conditions. These tests are normally very time consuming and require the allocation of the test setups or test facilities and capacities over a long period of time. This chapter is applicable, if the lifetime test should be done at PHYTRON.

POST INSPECTION AFTER TESTS / LIFETIME :
Is to be done to compare the test values or inspection results at BOL and EOL. The lifetime test can be done at PHYTRON or at customer side on next assembly level.

EIDP CHAPTER	PRE CONDITIONING	INITIAL INSPECTION BEFORE ASSEMBLING	INITIAL FUNCTION TESTS	ENVIRONMENTAL TESTS	POST ENVIRONMENTAL TESTS	VIBRATION	POST VIBRATION TESTS	THERMAL TESTS	THERMAL VACUUM TESTS	POST THERMAL TESTS	FINAL VACUUM OUTGASSING	FINAL INSPECTION	PACKAGING / TRANSPORTATION	LIFETIME	POST INSPECTION AFTER TESTS / LIFETIME
3.0 INITIAL INSPECTION BEFORE ASSEMBLING															
3.1 BOL MICROSCOPE INSPECTION		X													
4.0 ELECTRICAL TESTS															
4.1 RESISTANCE		X													
4.2 INDUCTANCE			X												
4.3 HIGH VOLTAGE TEST			X												
4.4 THERMO-COUPLE FUNCTION TEST		X													

DRAFT B

EIDP CHAPTER	PRE CONDITIONING	INITIAL INSPECTION BEFORE ASSEMBLING	INITIAL FUNCTION TESTS	ENVIRONMENTAL TESTS	POST ENVIRONMENTAL TESTS	VIBRATION	POST VIBRATION TESTS	THERMAL TESTS	THERMAL VACUUM TESTS	POST THERMAL TESTS	FINAL VACUUM OUTGASSING	FINAL INSPECTION	PACKAGING / TRANSPORTA-TION	LIFETIME	POST INSPECTION AFTER TESTS / LIFETIME
5.0 DYNAMICAL TESTS															
5.1 ROTATION DIREC-TION CHECK			X												
5.2 DETENT TORQUE MOTOR (MAGNET-IZED)			X												
5.3 HOLDING TORQUE MOTOR UNDER NOM-INAL CURRENT			X												
5.4 STARTING CUR-RENT MOTOR WITH GEAR UNDER AMBI-ENT TEMPERATURE			X												X
5.5 DROP DOWN CURRENT MOTOR WITH GEAR UNDER AMBIENT TEMPERA-TURE			X												X
5.6 AXIAL FORCE UNDER AMBIENT TEMPERATURE			X												X

6.0 OPERATING TIME/CYCLE RECORD	NOT REQUIRED

7.0 MECHANICAL TESTS															
7.1 MAIN MOTOR DIMENSIONS			X												
7.2 AXIAL PLAY GEAR SHAFT			X												
7.3 RADIAL PLAY GEAR SHAFT			X												
7.4 RUNOUT GEARSHAFT			X												
7.5 REAR BEARING PRELOAD		X													
7.6 LENGTH OF LEADS			X												

8.0 OUTGASSING															
8.1 BAKEOUT STATOR	X														

9.0 SURFACE PREPERATIONS	NOT REQUIRED

10.0 VIBRATION TESTS	NOT REQUIRED

DRAFT B

EIDP CHAPTER	PRE CONDITIONING	INITIAL INSPECTION BEFORE ASSEMBLING	INITIAL FUNCTION TESTS	ENVIRONMENTAL TESTS	POST ENVIRONMENTAL TESTS	VIBRATION	POST VIBRATION TESTS	THERMAL TESTS	THERMAL VACUUM TESTS	POST THERMAL TESTS	FINAL VACUUM OUTGASSING	FINAL INSPECTION	PACKAGING / TRANSPORTATION	LIFETIME	POST INSPECTION AFTER TESTS / LIFETIME
11.0 THERMAL TESTS															
11.1 STARTING CURRENT MOTOR WITH GEAR UNDER FLUID NITROGEN TEMPERATURE								X							X
11.2 DROP DOWN CURRENT MOTOR WITH GEAR UNDER FLUID NITROGEN TEMPERATURE								X							X
11.3 AXIAL FORCE UNDER FLUID NITROGEN TEMPERATURE								X							X

12.0 RADIATION TESTS	NOT REQUIRED

13.0 LIFETIME TESTS	NOT REQUIRED

14.0 CLEANING AND PACKAGING															
14.1 IDENTIFICATION / LASER MARKING		X											X		
14.2 FINAL CLEANING													X		
14.3 PACKAGING													X		

15.0 POST INSPECTIONS AFTER TESTS / LIFTIME															
15.1 EOL MICROSCOPE INSPECTION															X

DRAFT B

5.3 PROJECT SCHEDULE:

After receiving the complete order we will create and share the final interface control drawing (ICD) within 1-2 weeks for customer written approval.

At point of release we must order all external long term buy parts. Customer needs to especially test and verify the lifetime performance at next assembly level. Phytron foresees here no tests.

The lead time of the prototypes can be approx. 14 weeks (bearing and gear part lead time will be approx.10 weeks).

6 APPENDIX

Not applicable.

DRAFT B