SSR1 resonators

325 MHz , b= 0.2

Status of Design and Fabrication

Leonardo Ristori

PXIE Meeting – 4 Oct 2011

"Historical" parameters

Quantity	Original Values ⇒ CW machine
Beampipe, shell ID	30 mm, 492 mm
E_{peak}/E_{acc}	2.56
B_{peak}/E_{acc}	3.87 mT/(MV/m)
G, R/Q_0, β_g	84 Ω, 242 Ω, 0.21
RF structure	1 ms, 9 mA ⇒ CW, 1 mA
Loaded BW	388 Hz ⇒ 43 Hz
He temp, pressure	4.4 K, 900 torr ⇒ 2.0 K, 20 torr
He press variation	±12.9 torr ⇒ ± .25 torr
Accel. Grad., E_{acc}	10 MV/m ⇒ 12 MV/m
Q_0 at E_{acc}	> 0.5×10^9 ⇒ >1×10^{10}?
LFD co. (jacketed)	3.8 Hz/(MV/m)^2 ⇒ Non-issue
df/dp (jacketed)	-210 Hz/torr ⇒ <25 Hz/torr?

1st prototype
Zanon, Italy

2nd prototype
Roark, USA

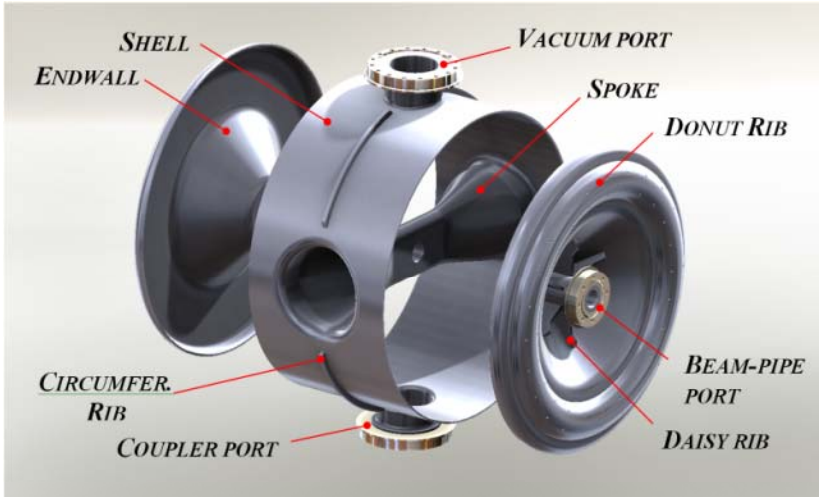

FNAL & ANL:
E_{acc} = Tot acc voltage /L_{eff}
$L_{eff} = L_{iris} = (2/3)\beta\lambda$ = 135 mm

If using:
$L_{eff*} = \beta\lambda$ = 202.5 mm
$E_{acc*} = 0.67\ E_{acc}$

RF design of SSR1

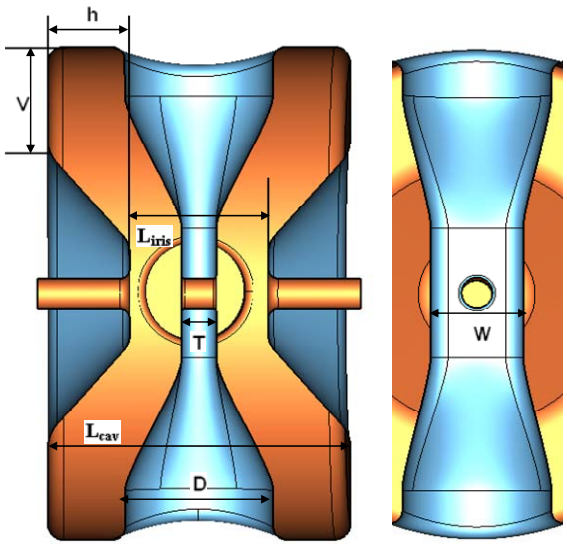

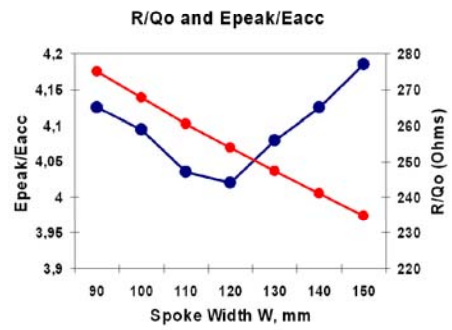

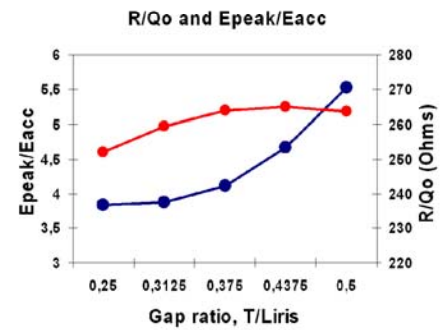

- The dimensions were varied in MWS to optimize the RF design.

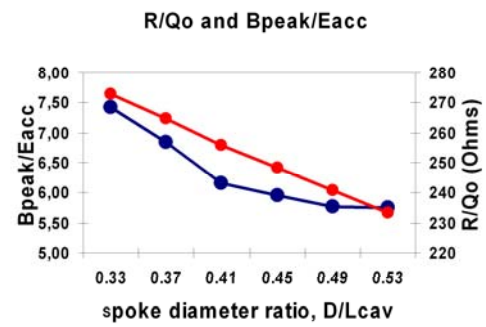

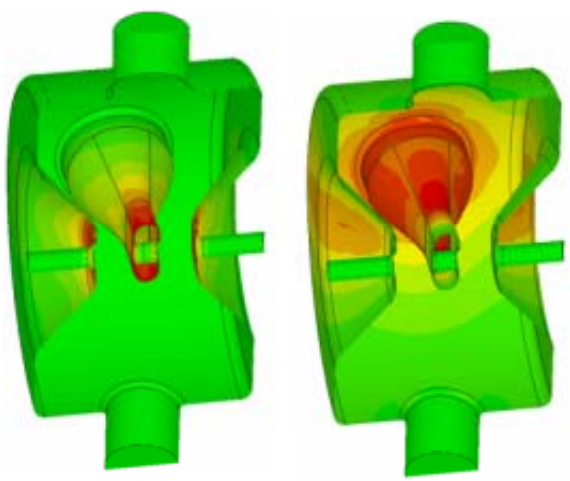

- Surface electric (left) and magnetic (right) fields in SSR1.
- The field strength increases as the color changes from green to yellow to red.

SSR1 engineering parameters

parameter	design/requirement			estimated		measured	
	min	max					
He fluctuations (range)	**0.2**	**0.2**	torr				
Bandwidth (minimal)	**68**		Hz				
MAWP (warm)	**2**		bar				
MAWP (cold)	**2.5**		bar				
microphonics RMS	**3**	**5**	Hz				
microphonics full range	**30**	**30**	Hz				
dp contribute to mph's	**50%**	**90%**					
G1							
df/dp with tuners	**75**	**135**	Hz/torr	**-210.0**	Hz/torr	**-135.0**	Hz/torr
df/dp free BPs bare			Hz/torr	**-615.0**	Hz/torr	**-590.0**	Hz/torr
df/dp free BPs jacketed			Hz/torr	**-360.0**	Hz/torr	n/a	Hz/torr
df/dp fixed BPs			Hz/torr	**27.0**	Hz/torr	n/a	Hz/torr
G2							
df/dp with tuners	**75**	**135**	Hz/torr	in progress	Hz/torr	n/a	Hz/torr
df/dp free BPs bare			Hz/torr	**-630.0**	Hz/torr	n/a	Hz/torr
df/dp free BPs jacketed			Hz/torr	in progress	Hz/torr	n/a	Hz/torr
df/dp fixed BPs			Hz/torr	**19.0**	Hz/torr	n/a	Hz/torr
Spring constant (bare)			N/µm	**21.0**	N/µm	**18.9**	N/µm
Spring constant (jacketed)			N/µm	**25.2**	N/µm	**26.0**	N/µm
df/dl (total)			Hz/µm	**530.0**	Hz/µm	**540.0**	Hz/µm
df/dF (each of 2 tuners)			Hz/N	**21.0**	Hz/N	**28.6**	Hz/N
Min detuning range	**10000**	**20000**	Hz				
Tuner range (each of 2)	9.4	18.9	µm	3260.0	µm		
Tuner max force (each of 2)	237.7	475.5	N				

Parameters in the Functional Requirement Specification (awaiting approval)

Table 1: Cavity RF and mechanical design parameters

Requirement	Description	SSR0	SSR1	SSR2
1	Frequency	325 MHz (2K)	325 MHz (2K)	325 MHz (2K)
2	Shape	Spoke Resonator	Spoke Resonator	Spoke Resonator
3	Geometric Beta (β_G)	.1	.2	.47
4	Iris Minimum Aperture	30 mm	30 mm	40 mm
5	Slow Tuner Range	≥ 100 kHz	≥ 100 kHz	≥ 100 kHz
6	Fast Tuner Range	≥ 250 Hz	≥ 250 Hz	≥ 250 Hz

Table 2: Cavity operational/test requirements

Requirement	Description	SSR0	SSR1	SSR2
1	Max Leak Rate (room temp)	$<10^{-10}$ atm-cc/sec	$<10^{-10}$ atm-cc/sec	$<10^{-10}$ atm-cc/sec
2	Gradient (E_{acc})	10	12	10
3	Q_0	$Q_0>6.5 \times 10^9$	$Q_0>1.1 \times 10^{10}$	$Q_0>1.3 \times 10^{10}$
4	Dissipated Power	< 1.4 W	< 2 W	< 3.7 W
5	Microphonic Control	df/dP<75 Hz/torr (2K)	df/dP<40 Hz/torr (2K)	df/dP<40 Hz/torr (2K)
6	Field Quality	Within ±10%	Within ±10%	Within ±10%
7	Residual Resistance	<10 nΩ (vertical test)	<10 nΩ (vertical test)	<10 nΩ (vertical test)
8	Field Emission	TBD	TBD	TBD
9	Multipacting	none within ±10% of operating gradient		
10	Operating temperature	1.8-2.1 K		
11	Operating Pressure	16-41 mbar differential		
12	MAWP	2 bar (room temperature) 4 bar (2K) internal to helium vessel		
13	RF power input per cavity	< .73 kW (CW, operating)	< 1.87 kW (CW, operating)	< 3.2 kW (CW, operating)

SSR1 Mechanical design

- **Generation 1** (2 prototypes)
  - Designed for Pulsed regime - low LFD, "high" df/dp (≈-140 Hz/torr measured)
  - Optimized RF design with a max cavity length
  - Flats on end walls, donut rib, other ribs
  - Brazed transitions to SST helium vessel w/blind holes
- **Generation 2 (10 cav)**
  - Increase MAWP to 2.0 bar (for CM operation)
  - Changed flange designs to allow code welds to he vessel
  - Facilitate welding of ribs and helium vessel
- **Generation 3 (proposed)**
  - Reduced df/dp

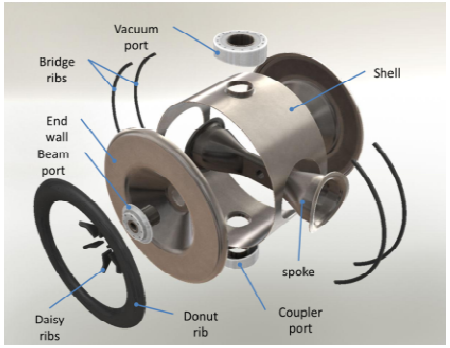

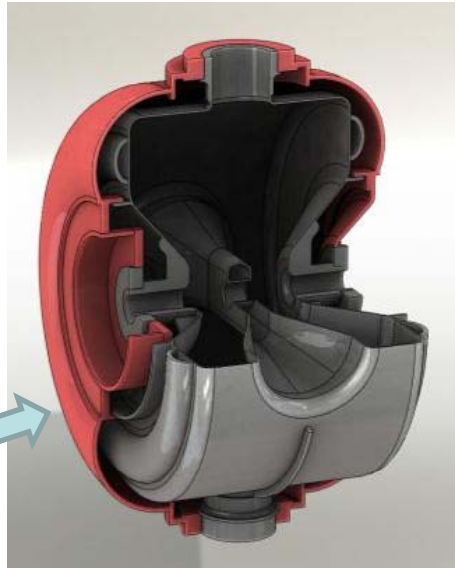

Design Requirements
1. Pressure rating
2. Pressure sensitivity
3. Tunability
4. Ease of fabrication

Fermilab

SSR1-G3

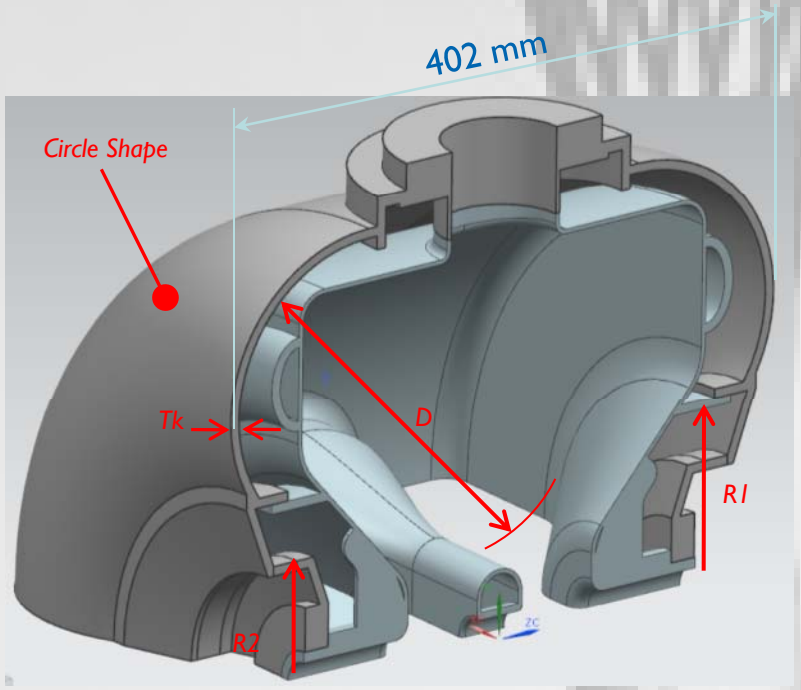

- Shell's shape: Circle
- Shell's shape parameter: D = 200mm
- Ring's radius: R1 = 125mm
- Shell's thickness: Tk = 6mm
- Bellow's radius: R2 = 91mm
- we supposed to need only one Bellow

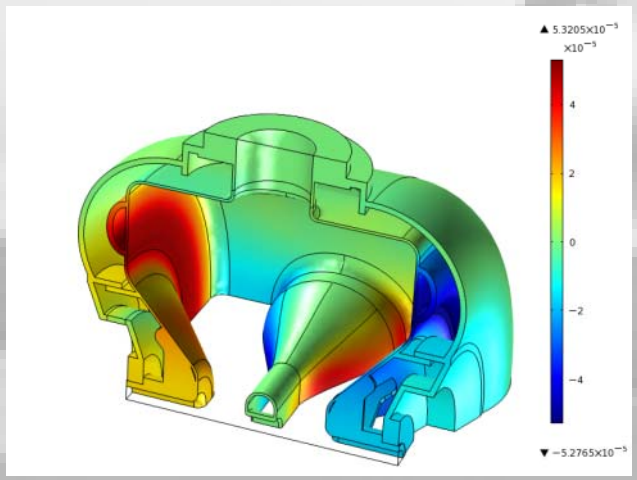

Performance, in terms of df/dp, simulating:

- by Comsol
  df/dp ~ 4.9 Hz/Torr
- by Ansys
  df/dp ~ -1 Hz/Torr
- by equation (extracting d_{BPs}, d_{Rings} from Ansys WB)
  df/dp ~ 2.6 Hz/Torr

Fabrication Status

		All parts formed	EBW all parts	EBW all sub assy's	Shell Freq Trimming	Final Welding	Delivery to Fermilab	Incoming Inspection	Bulk BCP & HPR	Bare tests	Jacketing	Jacketed tests
G1	S1 ZN 101											
G1	S1 RK 102										Oxidized Scrapped	
G2	S1 IUAC 103			issues with EBW								
G2	S1 IUAC 104			issues with EBW								
G2	S1 NR 105											
G2	S1 NR 106					Hole in final weld						
G2	S1 NR 107											
G2	S1 NR 108											
G2	S1 NR 109											
G2	S1 NR 110											
G2	S1 NR 111											
G2	S1 NR 112											
G2	S1 NR 113			hole in collar								
G2	S1 NR 114			hole in collar								

	ready for activity
	in progress
	completed
	issue

See status at http://tdserver1.fnal.gov/leoristo/status-ssr.pdf

SSR1 Fabrication (Niowave & Roark, USA)

10 resonators being delivered in these months. Balance expected by end of 2011.

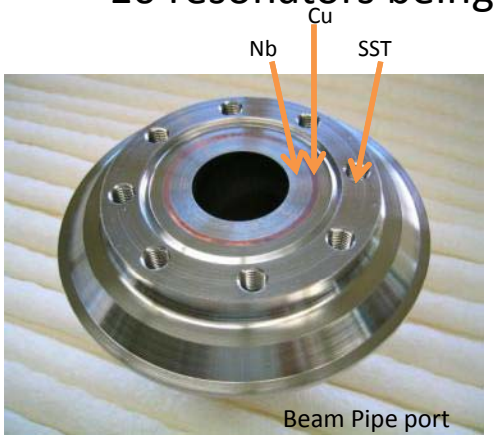

Prototype tuner

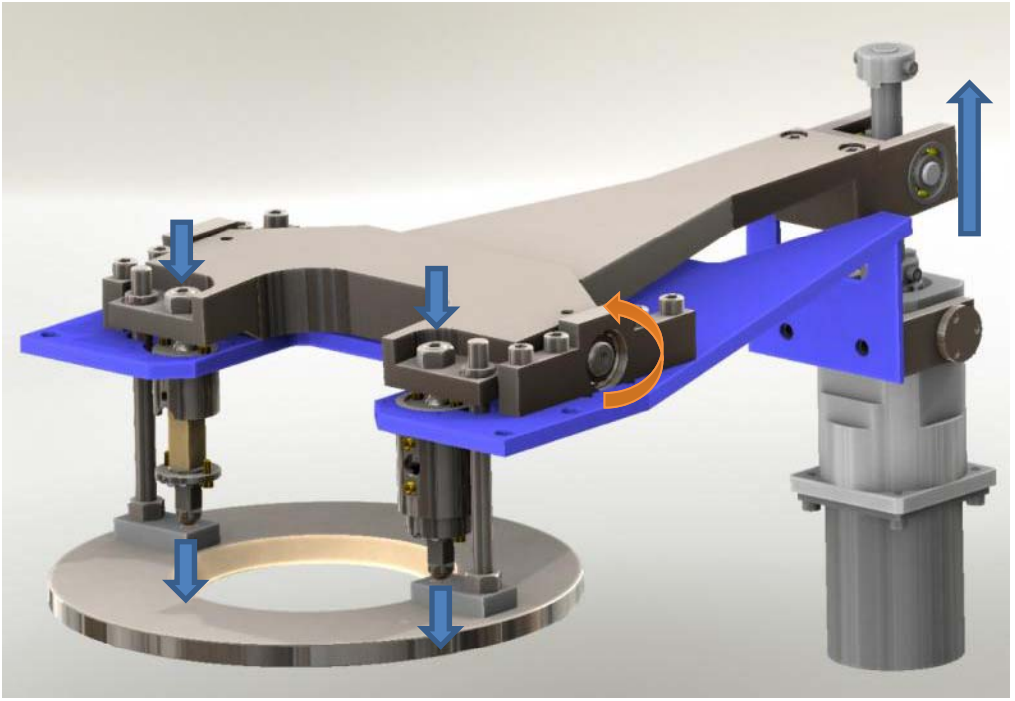

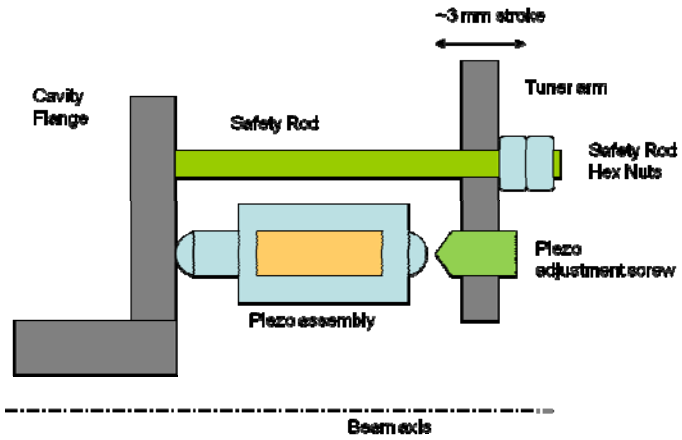

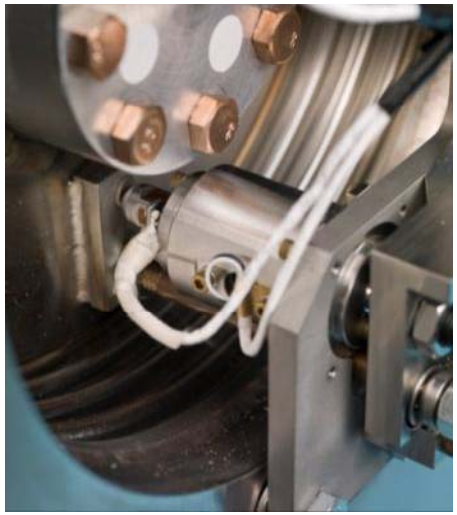

- Two piezo actuators “in series” with slow tuner arms (pivot with 5:1 mech. advantage).
- Stepping motor with harmonic drive,1:100 ratio (0.9 Hz/step).
- Present tests with a tuner on each end.
- Low profile along beam required due to close proximity to solenoid.
- dF/dL ~ 540 Hz/um
- Max stroke 3 mm

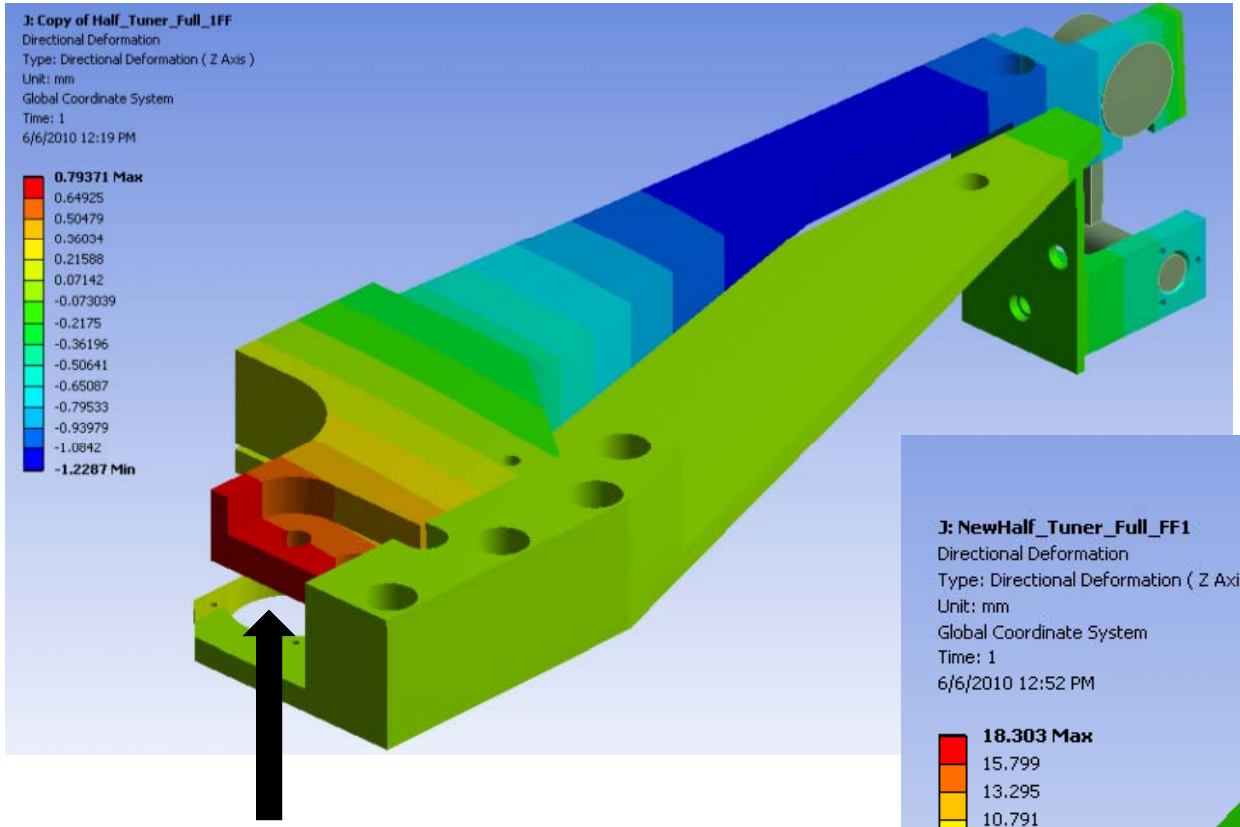

K=15000 N/mm

K=650 N/mm

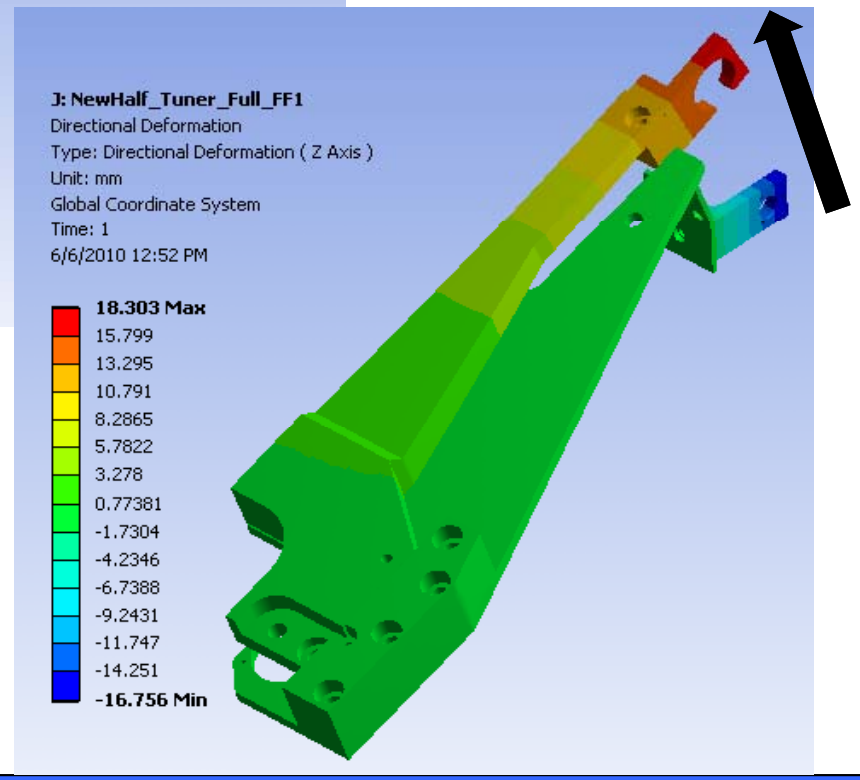

SSR1 df/dp

(design goal ≤ 75 Hz/torr)

Current configuration
(2 tuners)

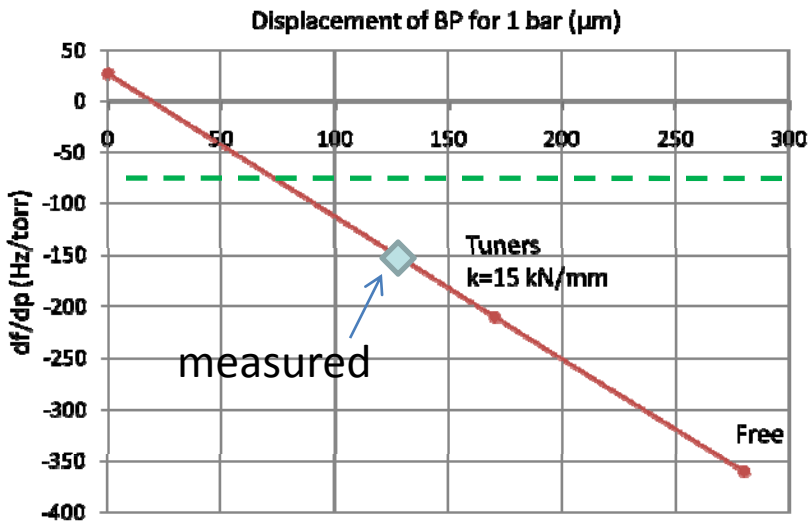

(first prototype of SSR1: Measured df/dp = ~145 Hz/torr)

Alternative configuration
(1 tuner)

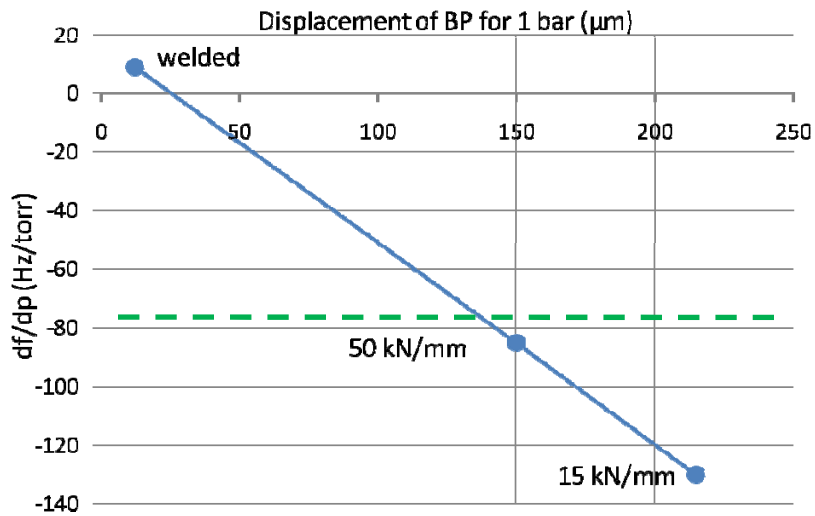

Improvements on helium vessel and tuner will reduce df/dp

SSR1 trimming & tuning

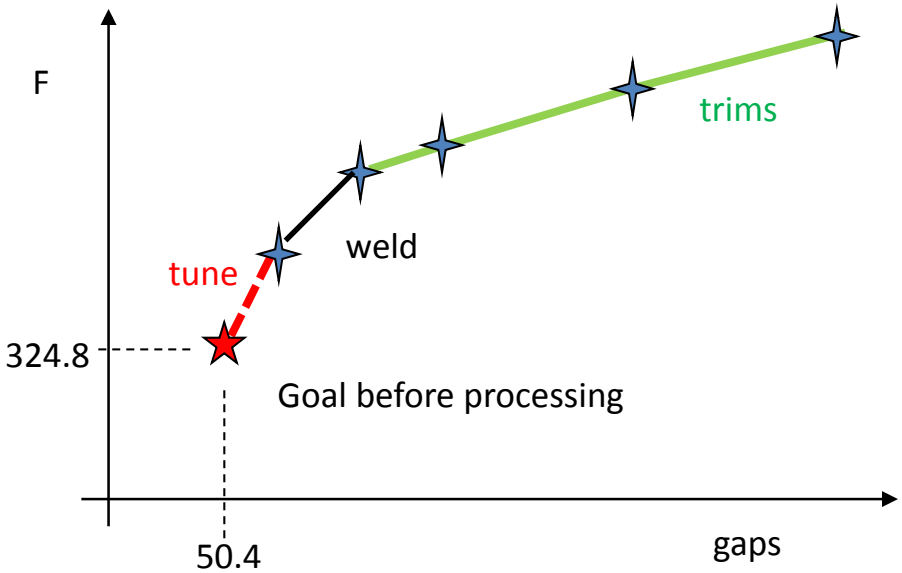

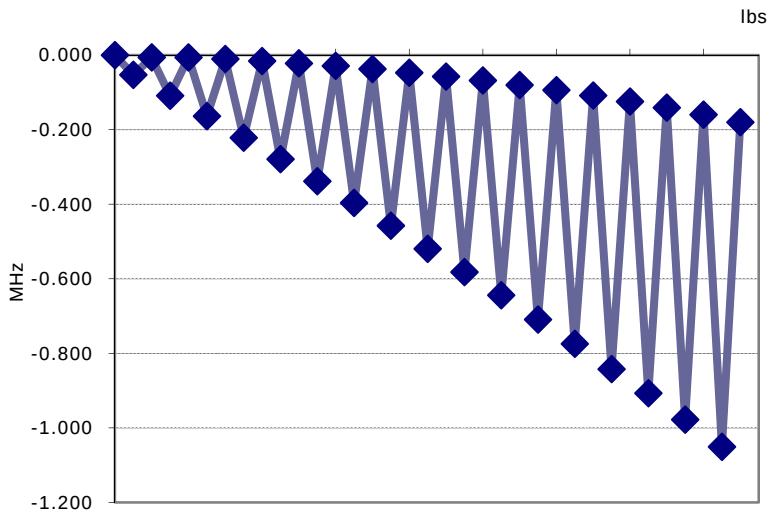

Chemistry +100 kHz
Cool down +500 kHz
Tune – 150 kHz
Preload – 150 kHz

CW tests

bare cavities

Cavity 1 – 4th test

- During cool down, a 7 hr hold at 100 K produced a large Q_0 drop, confirming **Q disease.**
- Subsequently baked SSR1-01 at 600 C for 10 hours at Jlab.

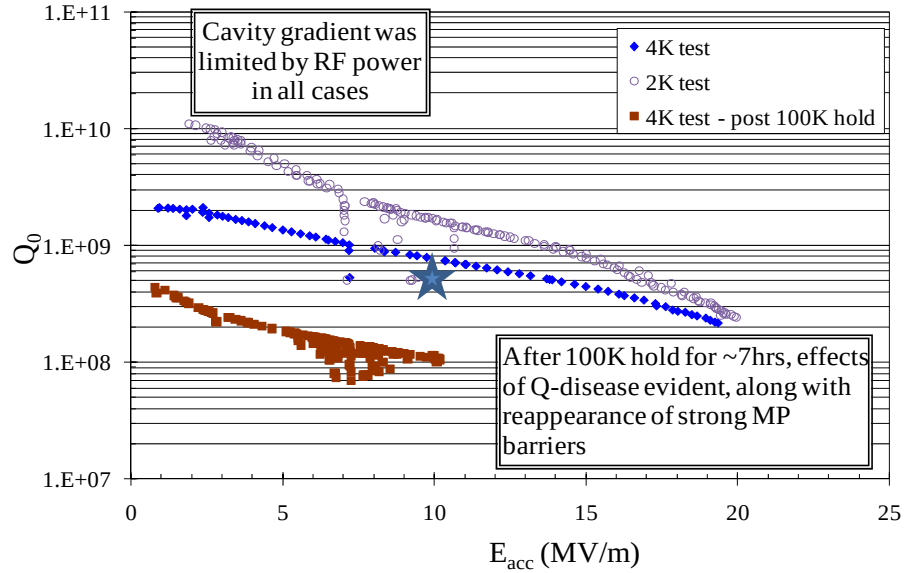

Cavity 2 – 1st test

- Effects of Q disease should not appear on first cooldown.
- X-rays increase at MP barriers, then disappear after punch through.

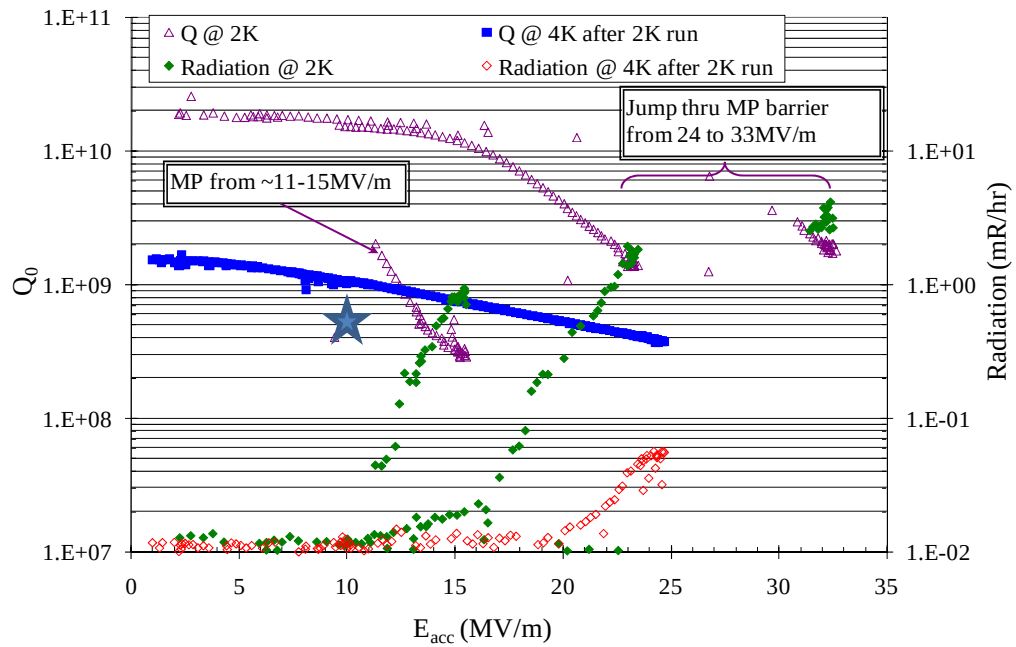

Commissioning 325 MHz Spoke Cavity Test Facility(SCTF)

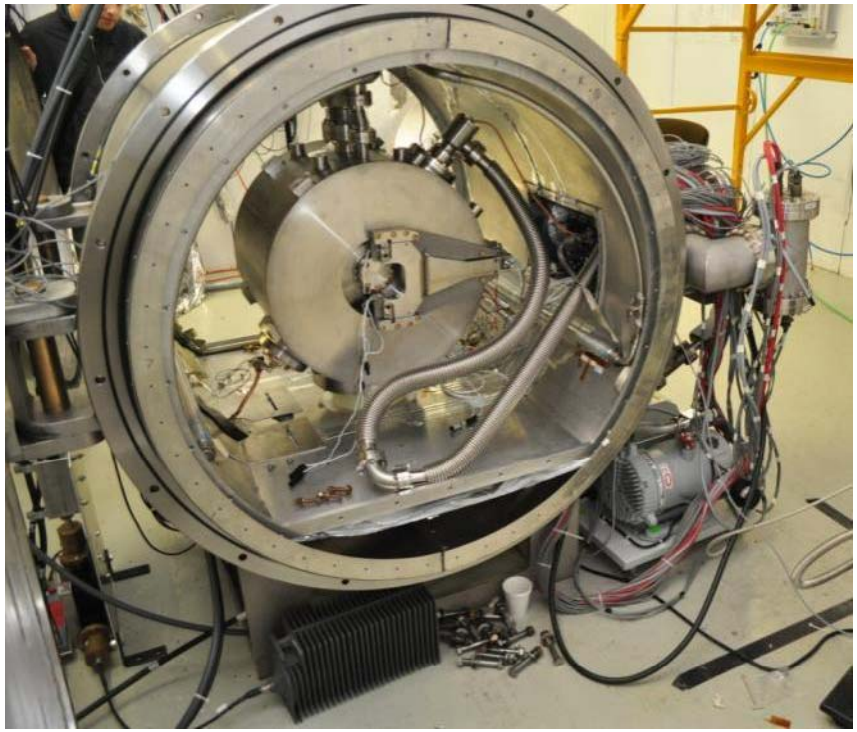

- Cooling to 4.5 K. (2 K upgrade is planned).
- Primary (secondary) pressure relief of 10 (5) psig. Operation near 5 psig.
- 200 W solid state supply for CW.
- 2MW Klystron for pulsed tests (used only 50kW).
- Digital LLRF with GUI interface screens .
- Locks to cavity frequency for CW operation.

- Room temp B shield just inside cryostat wall.
- 80 K thermal shield. Robyn (runs the place).
- Jacketed cavity with tuner. Test magnets.
- X-ray detectors along beam line:
  - Diodes ~10 cm from beampipe flanges
  - Foxes and Chipmunks ~50 cm outside cryostat.
- CW: Drive antenna with $Q_{ext} = 1.5 \times 10^8$

Q_0 .vs. E_{acc} scan in first cooldown and Q disease test

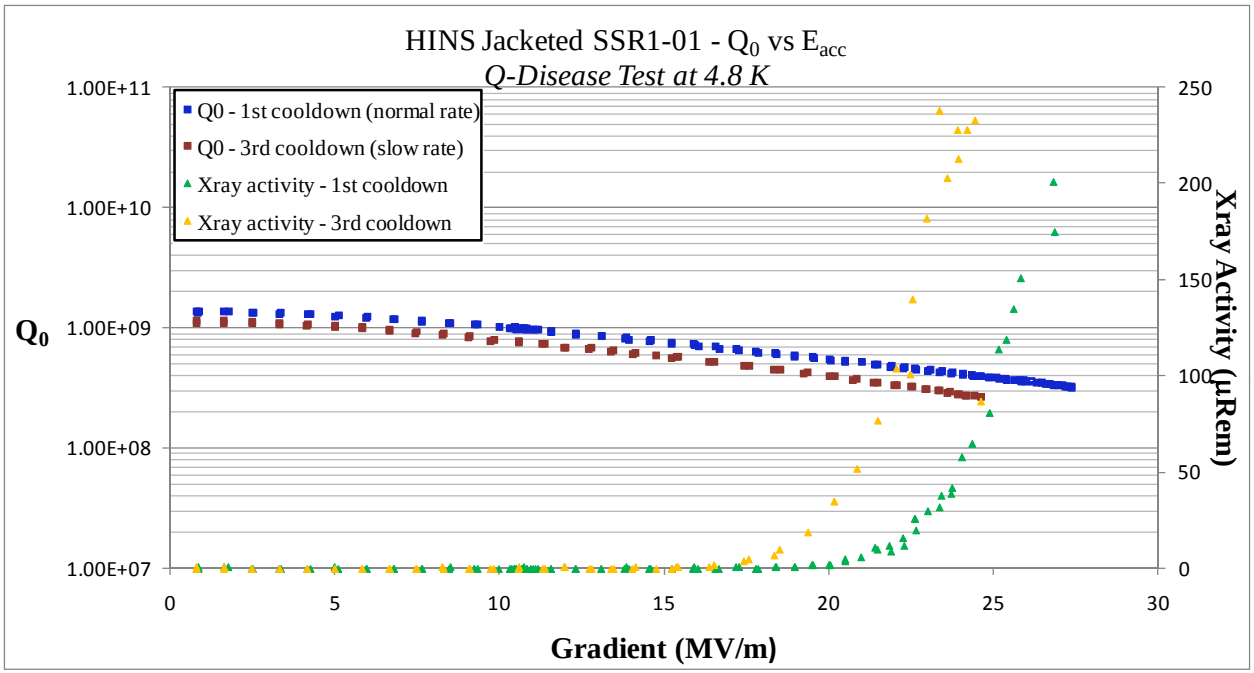

- Scan in first cooldown compares well with first cooldown of bare SSR1-02 in VTS at 4.4 K.
  - Maximum E_{acc} of **27 MV/m** is a bit higher.
- Within 5% measurement uncertainty, scan was unchanged after a second 3 hour cooldown.
- Third cooldown of 11 hours through sensitive region (150 K to 70 K): Much milder case of Q disease than before degassing: At 10 MV/m, Q_0 decrease of 20% versus 87% for 7 hour hold at 100 K in last VTS test of bare SSR1-01.
- However, 20% decrease at ~4.5 K is about a factor of three decrease at 2 K