MAIN DIMENSIONS OF HWR F=162.5 MHz and SSR1 F=325 MHz

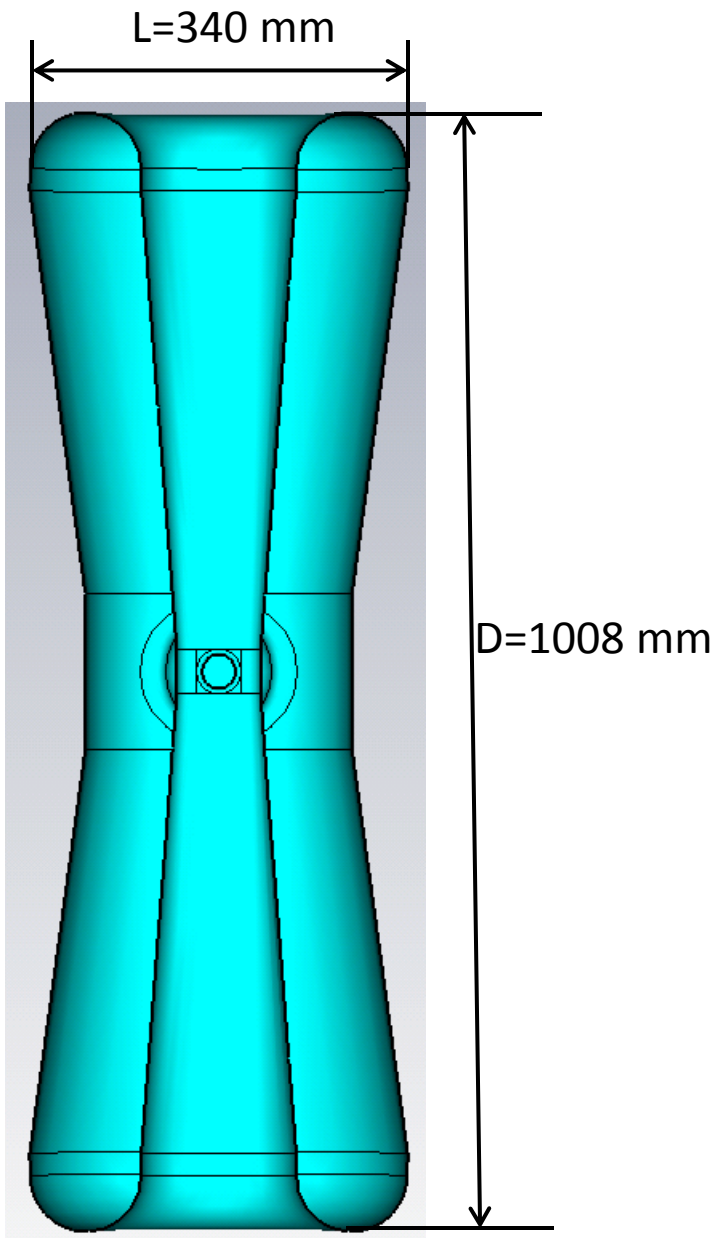

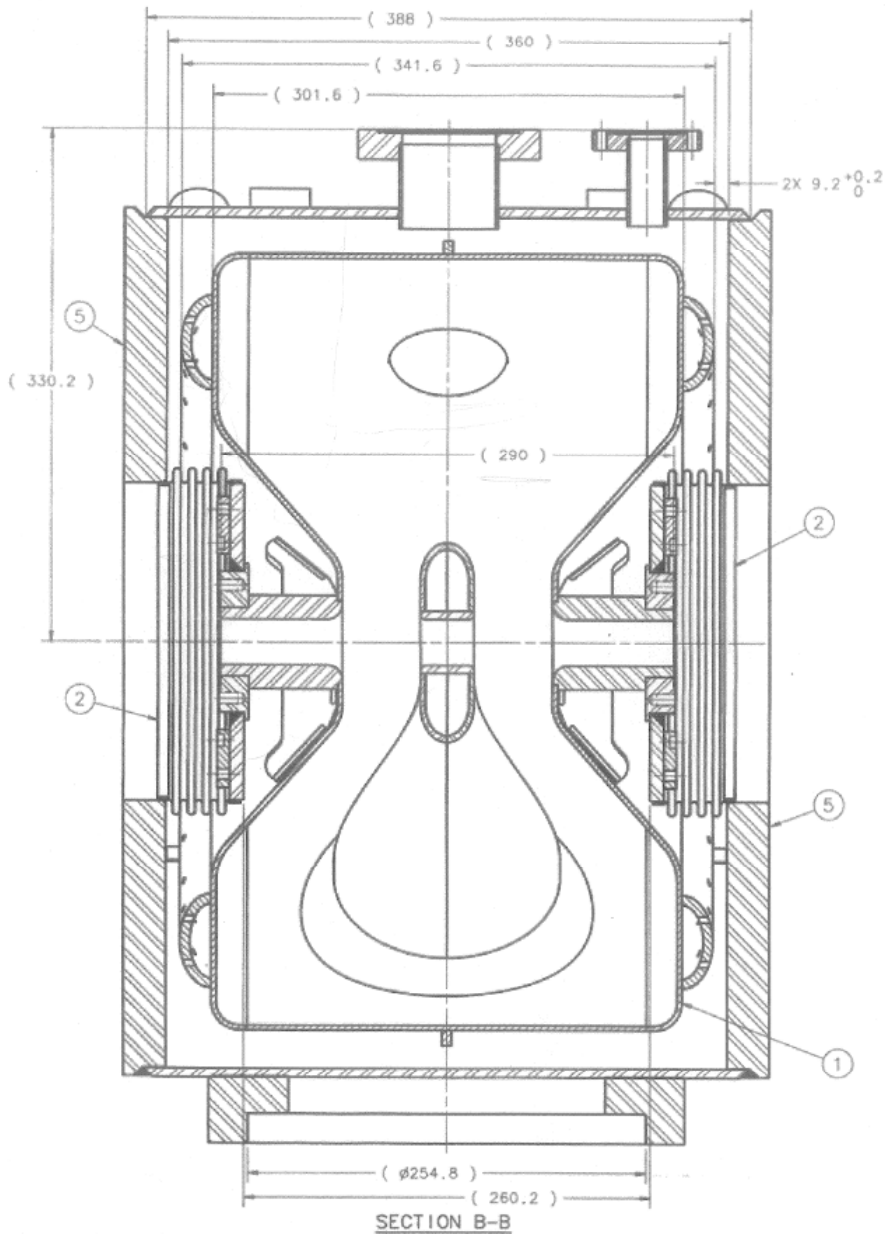

HWR 162.5 MHz

All dimensions in millimeters

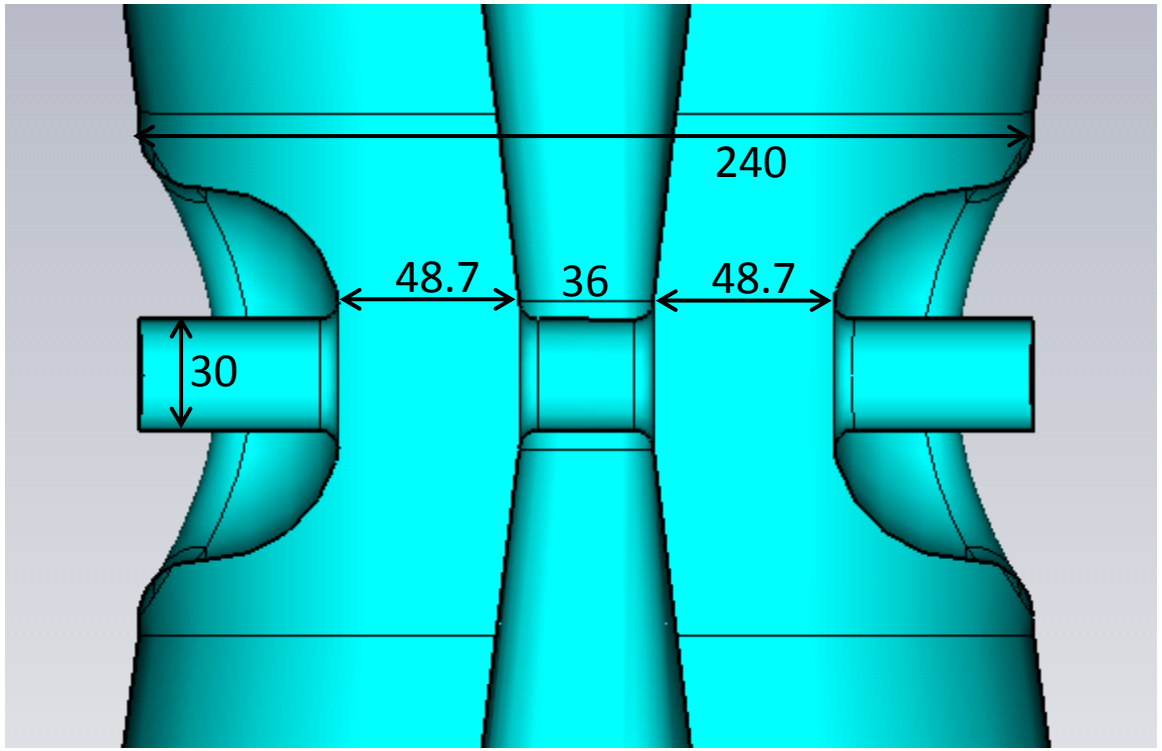

SSR1 325 MHz

All dimensions in millimeters

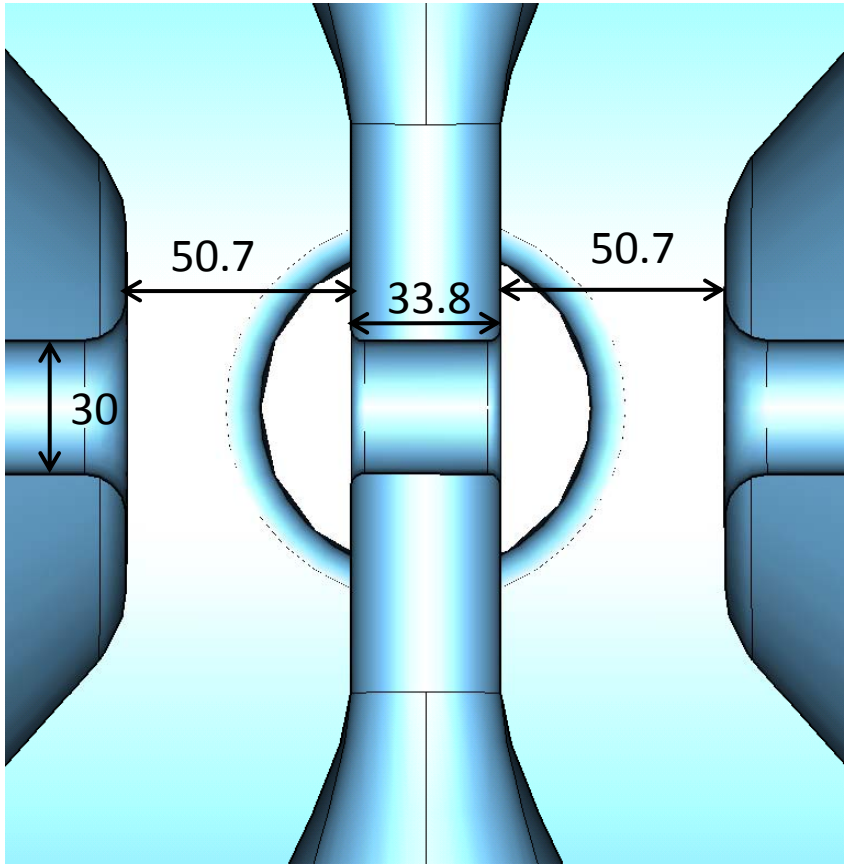

MAIN PARAMETERS OF HWR F=162.5 MHz and SSR1 F=325 MHz

	HWR	SSR1
F(MHz)	162.5	325
$\beta_{optimal}$	0.1	0.215
D_{cavity},mm	1008	491.3
L_{cavity},mm	340	295.3
R/Q, Ω	224	242
G, Ω	47.3	84
E_{max}/E_{acc}	4.83	3.84
H_{max}/E_{acc} (**mT/MV/m**)	6.07	5.81
$D_{eff}(2*\beta_{opt}\lambda/2)$,mm	185	198.5