SSR2 and 650 MHz Cavity and Cryomodule Status
PIP-II Meeting

Tom Nicol

July 1, 2014

Special thanks to Leonardo Ristori, Donato Passarelli, Margherita Merio, Paolo Berrutti, Yuriy Orlov, Chuck Grimm, and Tom Peterson

Existing documents – DocDb and elsewhere

- SSR2 beta 0.47 and 0.51 comparison
- SSR2 Cryomodule Functional Requirements Specification
- Functional Requirement Specification for
- 325 MHz SSR2 Superconducting RF Cavities
- ...

- 650 MHz Beta=0.9 Cryomodule Functional Requirements Specification
- 650 MHz Beta=0.9 Cavity Functional Requirements Specification
- 650 MHz high beta dressed cavity development plan
- Project X Beta = 0.9, 650 MHz, Cavity and Cryomodule Status
- 650 MHz Cryomodule Design Status -- 18 Jan 2011
- ...

SSR2 beta 0.47 and 0.51 status and comparison

P. Berrutti, T. Khabiboulline,
V. Lebedev, L. Ristori, V. Yakovlev.

04/29/2014

Mechanical design

Two SSR2 designs have been developed:

- SSR2-v0: β = 0.47. The resonator was design to be part of Project X under design at Fermilab.
- SSR2-Korea: β=0.51. SSR2-v0 was modified to meet requirements of Project X and RISP (Korea)

RF volume of SSR2-v0

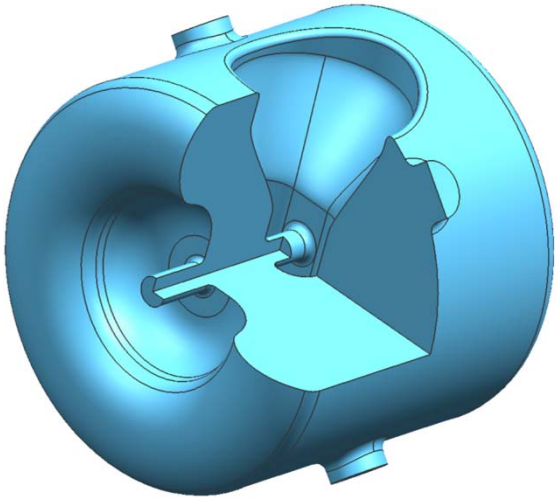

- Beam pipe aperture 40 mm
- 4 coupler ports
- 541.4 mm inside diameter

RF volume of SSR2-Korea

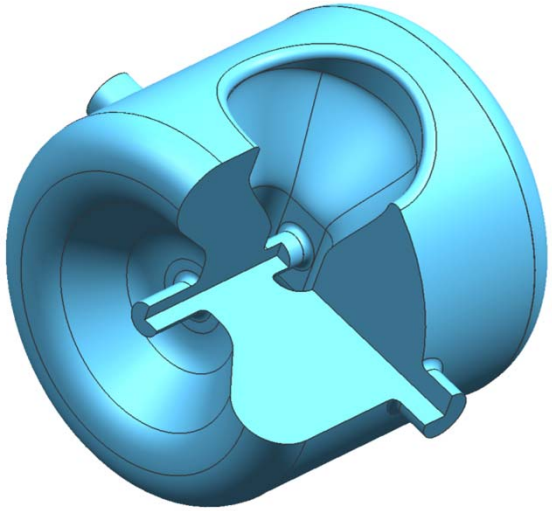

- Beam pipe aperture 50 mm
- 2 coupler ports
- 560.8 mm inside diameter

RF Design

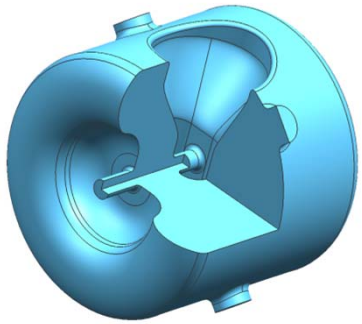

Mechanical Design

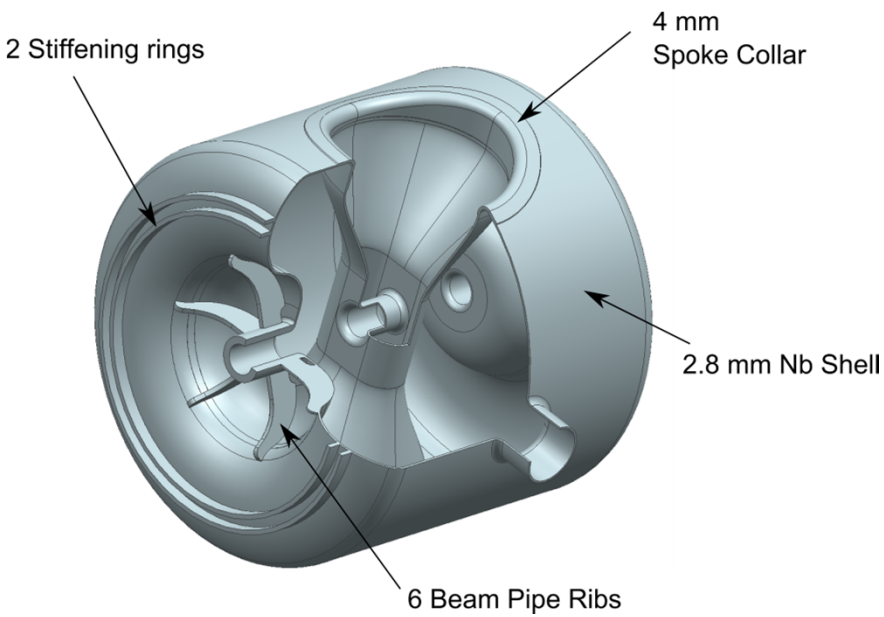

SSR2-v0 Electromagnetic Parameters

Parameter	Value
Frequency [MHz]	325
Aperture [mm]	40
β_{opt}	0.471
Diameter, mm	541.4
$L_{eff} = \beta_{opt}\lambda$ [mm]	434.8
R/Q, Ω	??
G, Ω	112.98
E_{peak}/E_{acc}	3.45
B_{peak}/E_{acc} [mT/MV/m]	6.107
Max energy gain [MeV]	??
Max E_{acc} [MV/m]	??
Q_0	≤ 8 10^9

- 2.8 mm RRR Nb shell
- 2 stiffening rings on each endwall (reactor grade Nb)
- 6 beam pipe ribs on each side (reactor grade Nb)
- 4 mm thick RRR Nb collar at the spoke

Two design conditions for the SSR2-v0 bare resonator:

Leak check elastic stress analysis:

Loading conditions

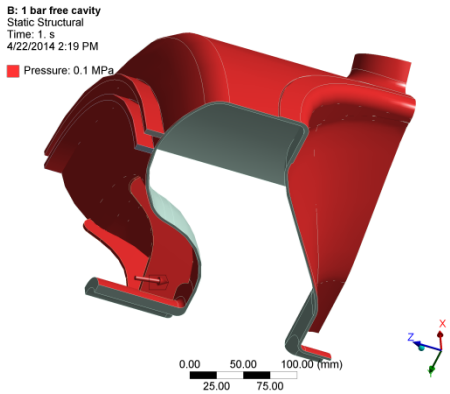

Equivalent Stresses

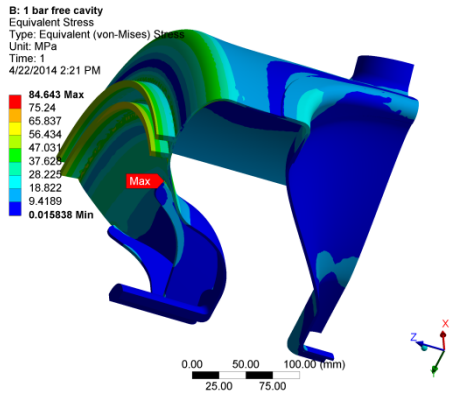

- Von Mises equivalent stresses below the yield limit of Niobium

VTS stress analysis:

Loading conditions

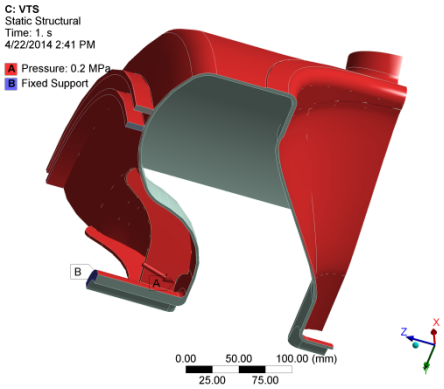

Equivalent Stresses

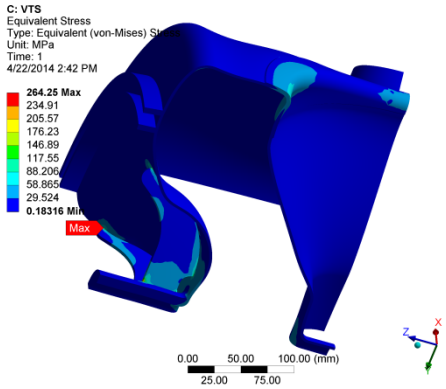

Equivalent Stresses ≥ 70 MPa

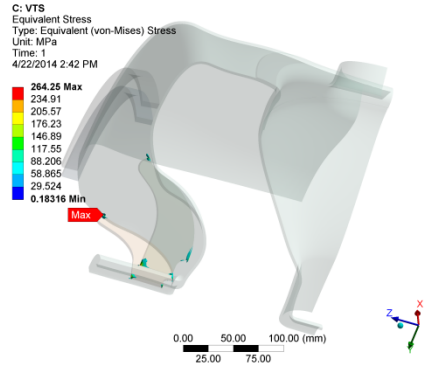

- The equivalent stress is higher than the yield limit of Nb only in local regions.

RF Design

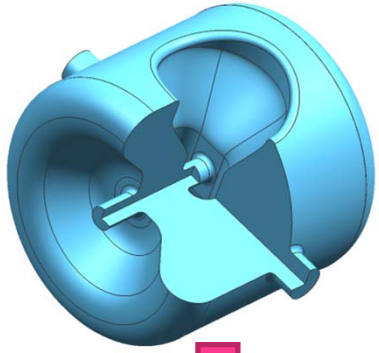

Mechanical Design

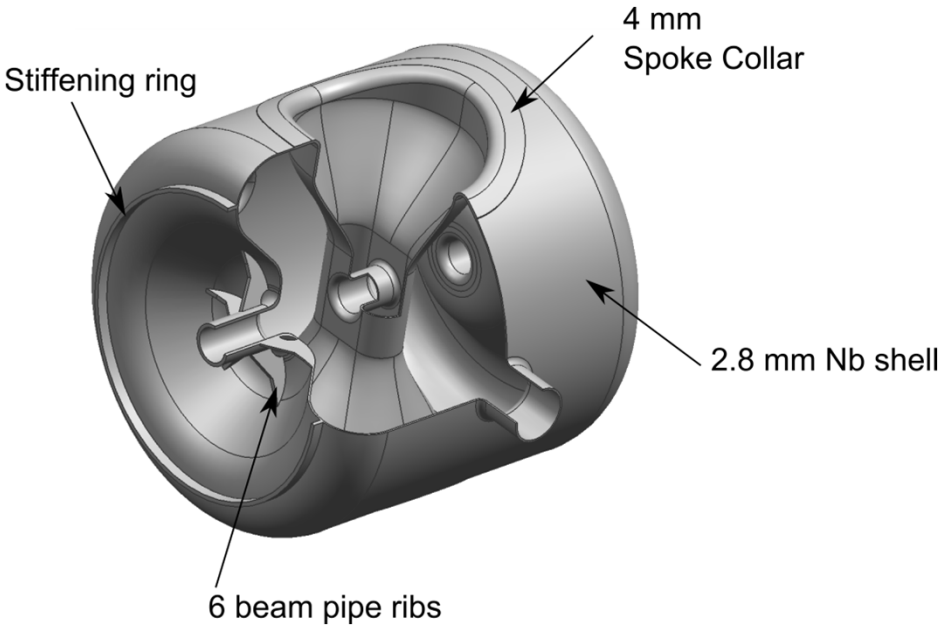

SSR2-Korea Electromagnetic Parameters

Parameter	Value
Frequency [MHz]	325
Aperture [mm]	50
β_{opt}	0.514
Diameter, mm	560.8
$L_{eff} = \beta_{opt}\lambda$ [mm]	475.3
R/Q, Ω	275.9
G, Ω	118.6
E_{peak}/E_{acc}	5.66
B_{peak}/E_{acc} [mT/MV/m]	6.25
Max energy gain [MeV]	5.32
Max E_{acc} [MV/m]	11.2
Q_0	≤ ????

- 2.8 mm RRR Nb shell
- 1 stiffening rings on each endwall (reactor grade Nb)
- 6 beam pipe ribs on each side (reactor grade Nb)
- 4 mm thick RRR Nb collar at the spoke

Two design conditions for the SSR2-Korea bare resonator:

Leak check elastic stress analysis:

Loading conditions

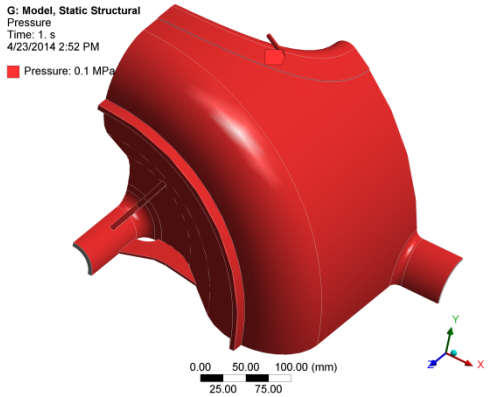

Equivalent Stresses

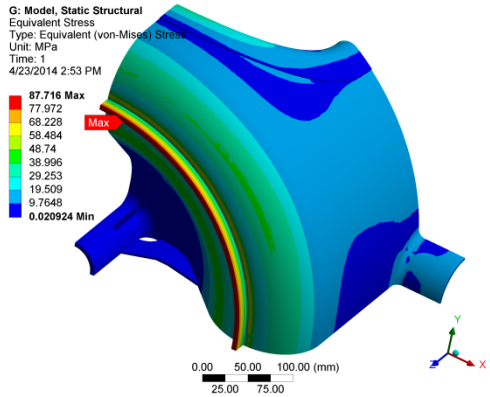

- Von Mises equivalent stresses below the yield limit of Niobium

VTS stress analysis:

Loading conditions

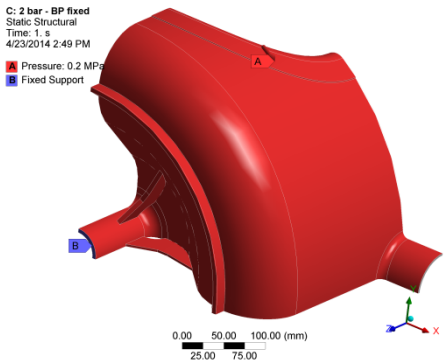

Equivalent Stresses

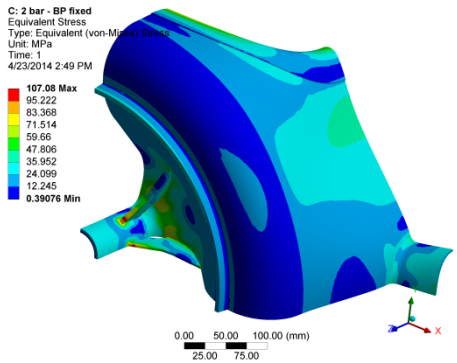

Equivalent Stresses ≥ 70 MPa

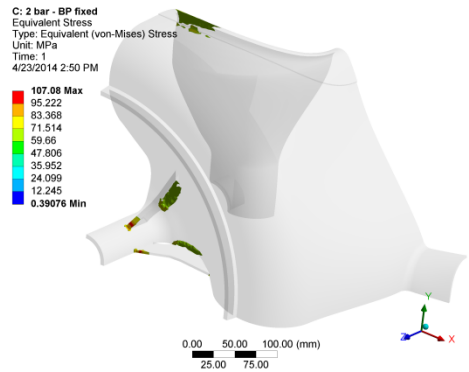

The equivalent stress is higher than the yield limit of Nb only in local regions.

SSR2-v0 Dressed Cavity:

Helium vessel made of 316L 6 mm thick

Design aimed to reduce the system sensitivity to pressure fluctuations of the He bath (*df/dp*)

* This is old design of Helium Vessel with flanges with blind holes, further design changed them with through holes.

The interfaces between the Helium Vessel and the cavity are:

- 2 beam pipes
- 4 coupler ports
- 1 transition ring

A bellows improves the *df/dp* performance of the dressed resonator and to allow tuning.

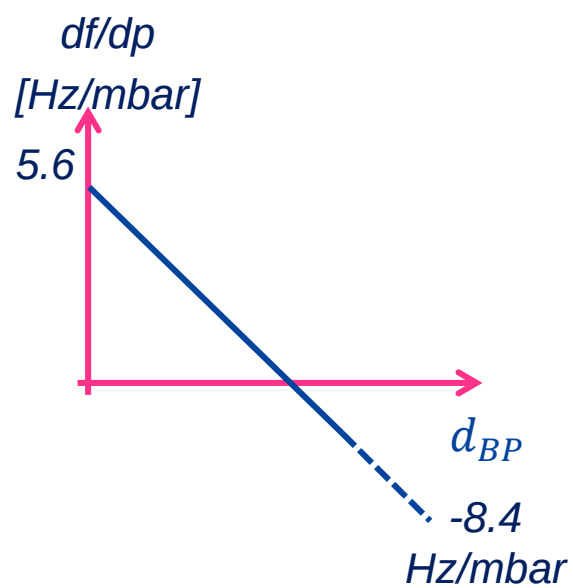

Table of main parameters

Parameters	SSR2 FNAL	SSR2 for RISP
Optimal beta	0.471	0.5149
Aperture [mm]	40	50
Frequency [MHz]	325	325
Effective length 2βλ/2 [m]	0.4348	0.4753
E_{peak}/E_{acc}	3.45	3.53
B_{peak}/E_{acc} [mT/(MV/m)]	6.107	6.25
G [Ohm]	112.98	118.65
R/Q [Ohm]	289.94	275.93
Q0 @ Rs=10 nOhms	1.129E+10	1.186E+10
Pd [W]@ Max en. gain	6.5	8.6
Max E_{peak} [MV/m]	40	40
Max B_{peak} [mT]	70	70
Max energy gain [MeV]	4.98	5.32
Max gradient [MV/m]	11.47	11.2

Conclusions

	SSR2 0.47	SSR2 0.51
EM parameters	Slightly better	Slightly worse
Quadrupole Field	Slightly better	Slightly worse
Multipacting	Need to mitigate	Need to mitigate
Acc.Eff.(TTF@38-180 MeV)	Slightly more uniform	Less effective at low β
Mechanical design	Need to be changed (MP)	Need to be changed (MP)
Sensibility to tuning (df/dl)	Slightly better	Slightly worse

- Preliminary decision pends towards lower beta cavity design (0.47).
- MP still needs to be mitigated (cavity shape changes), start working on low beta (0.47).
- Final choice will be done later.

SSR2
CRYOMODULE ASSEMBLY

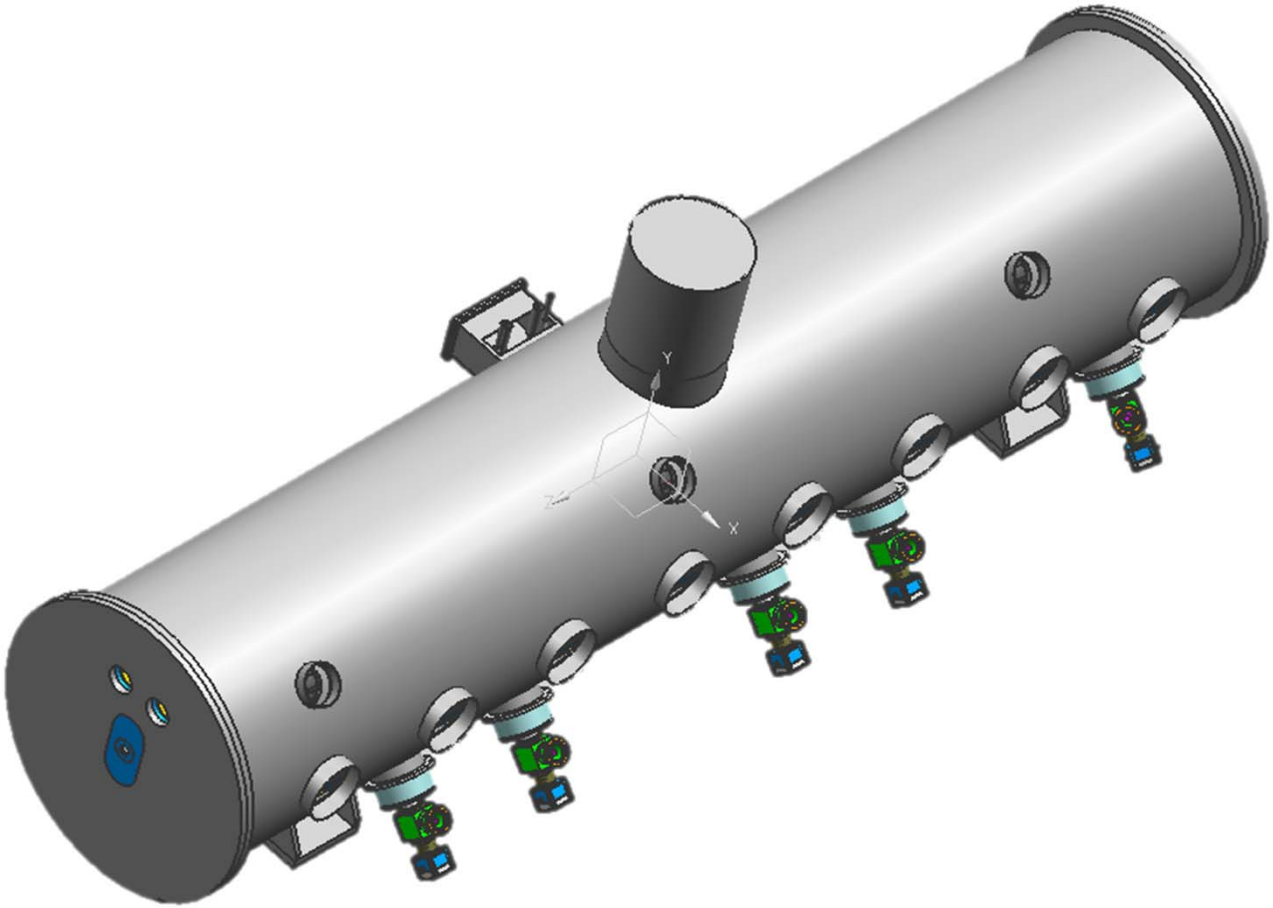

Cryomodule

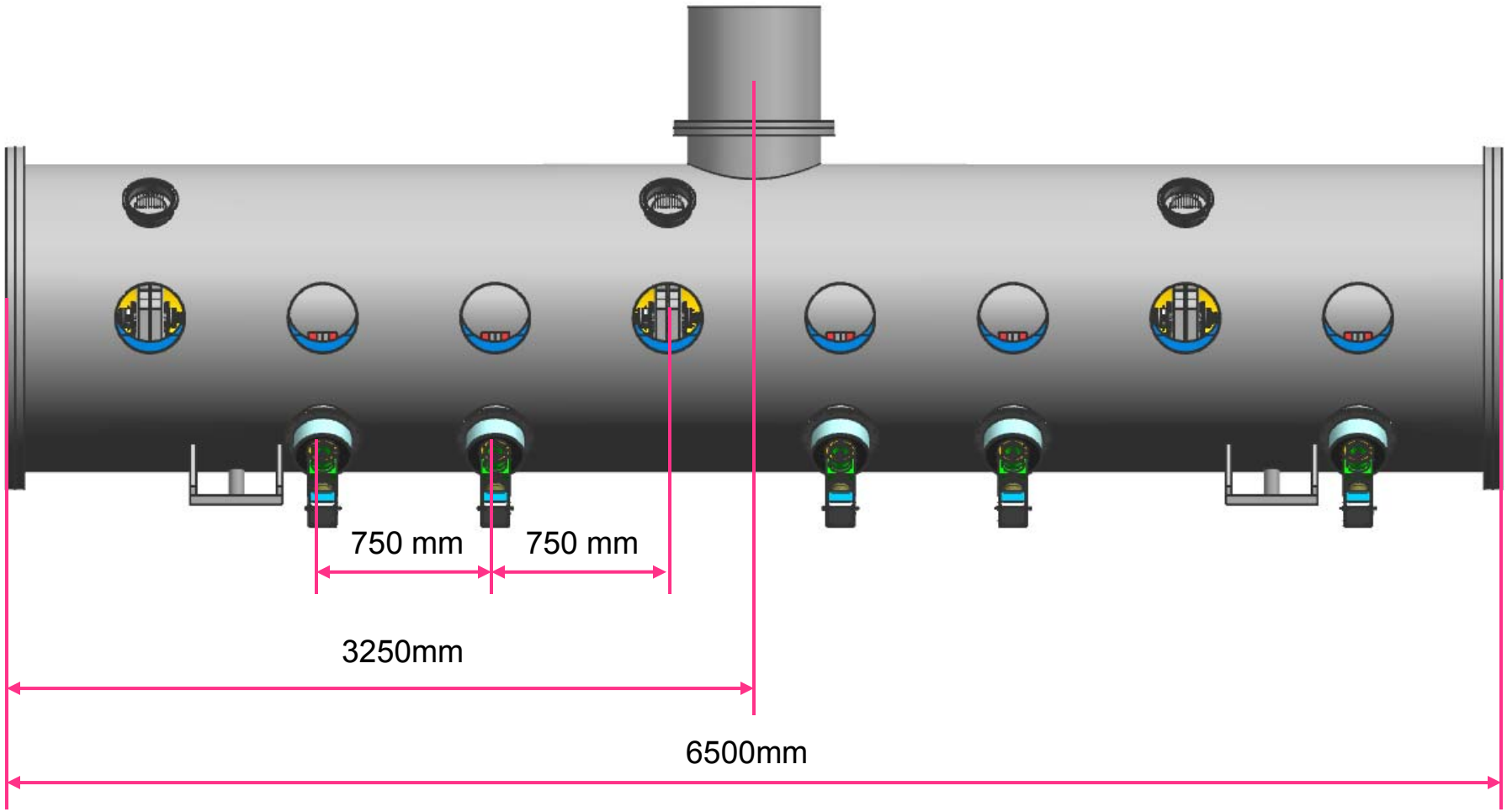

Cold Mass

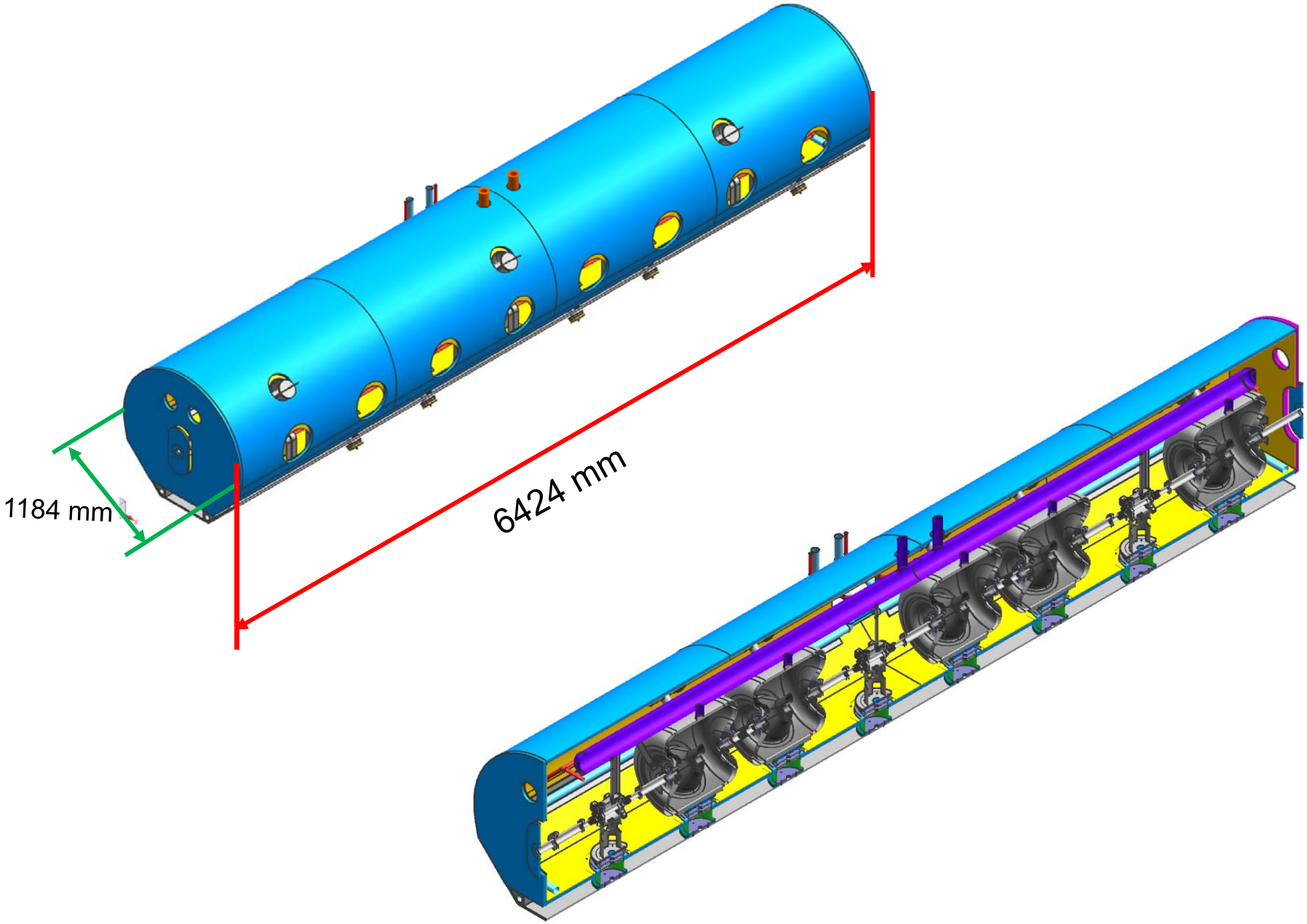

String

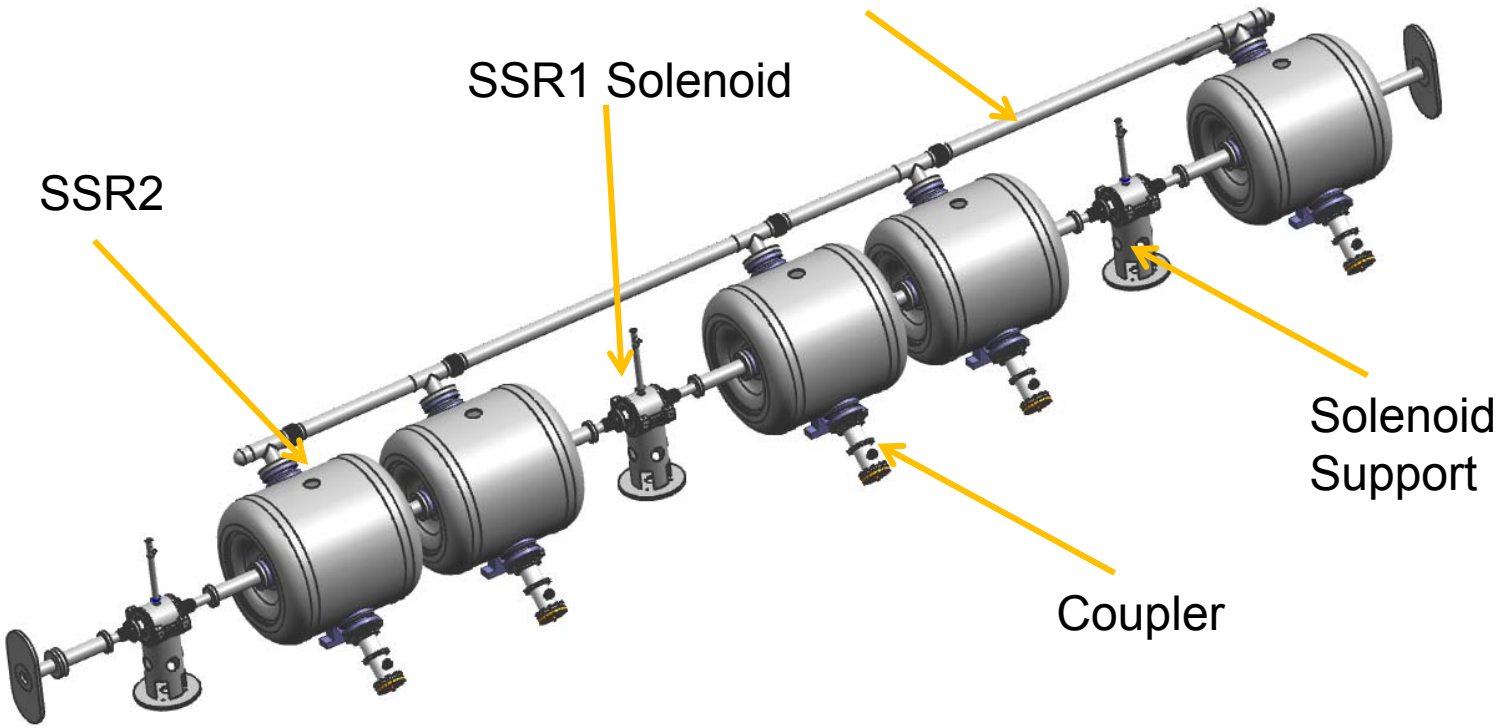
Vacuum Pipe
SSR1 Solenoid
SSR2
Solenoid
Support
Coupler

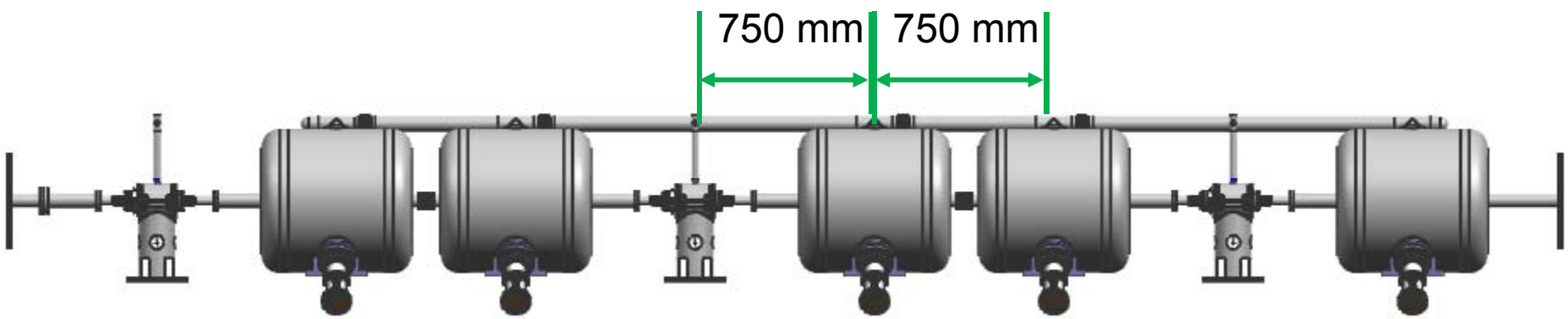
750 mm
750 mm

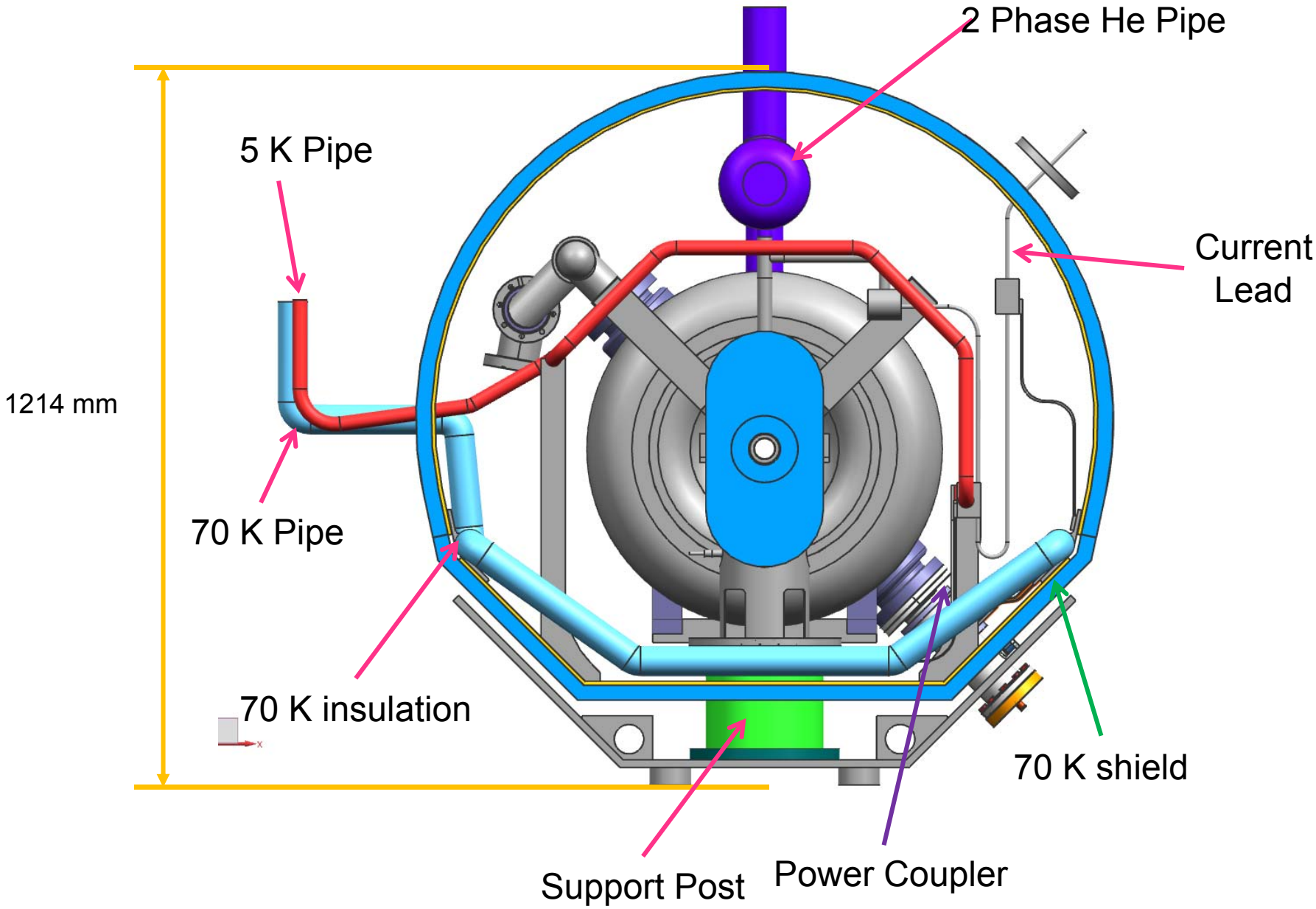
2 Phase He Pipe
5 K Pipe
Current Lead
1214 mm
70 K Pipe
70 K insulation
70 K shield
Support Post
Power Coupler

650 MHz Cavity, Helium Vessel, and Tuner Status at Fermilab

Chuck Grimm

Fermilab

Single Cell Cavities

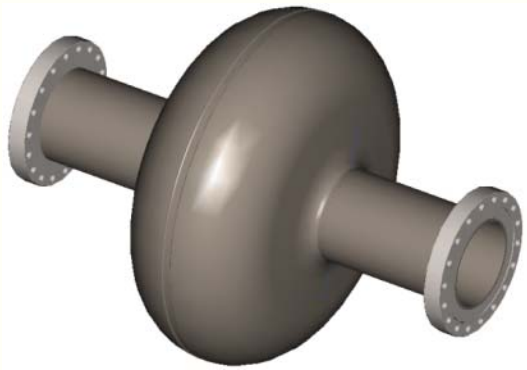

β= 0.9

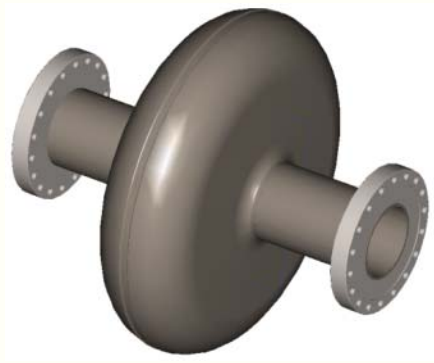

β= 0.61 Fermi Design

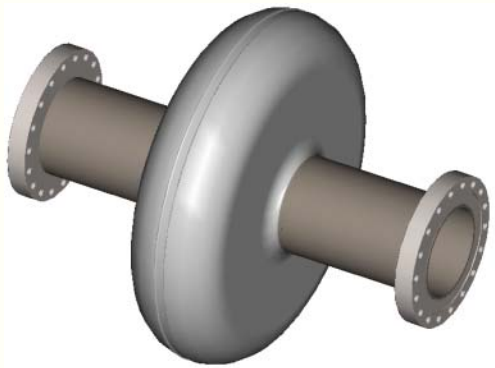

β= 0.61 J-Lab Design

- **Current Fabrication Status**
  - **Advanced Energy Systems (AES) * (6) β=0.9 cavities; complete in-house**
  - **PAVAC Industries * (5) β=0.9 cavities; ordered**
  - **Jefferson National Lab (J-Lab) * (2) β=0.61 cavities; complete in-house (part of MOU)**
  - **Research Instruments (RI) * (3) β=0.61 Fermi design, (3) β=0.61 J-Lab design; complete in-house**

Single Cell Cavities

Six β=0.9 cavities produced by AES
Two cavities have been tested at VTS

Single Cell Cavities

650 MHz β = 0.9 Cavity Processing & Testing

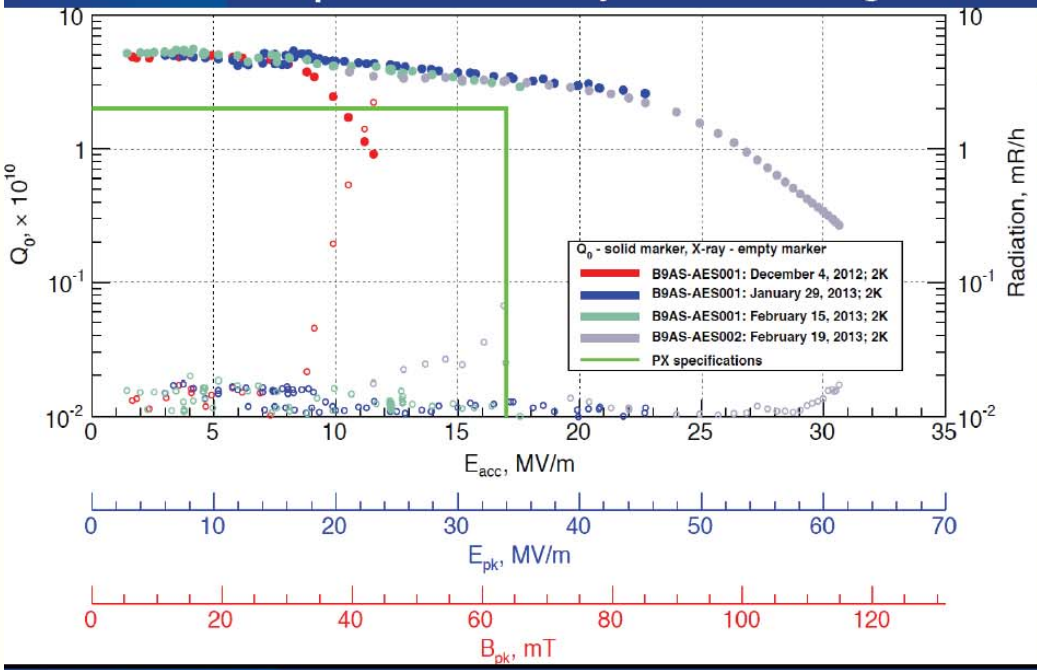

9 On Order

- *AES001 (Jan 29) EP; AES001 (Feb 15) EP +120°C bake ; AES002 (Feb 19) BCP*
- *$E_{acc\ max}$ =31 MeV/m (Feb 19, no quench)*
- *Q_0 @ 17 MeV/m is ~3.2-3.5e10*
- *Project X FRS: Q_0 @ 17 MeV/m is 2e10*

NO FE

Fermilab

Test results and slide by Anna Grassellino - FNAL

5-Cell Cavities

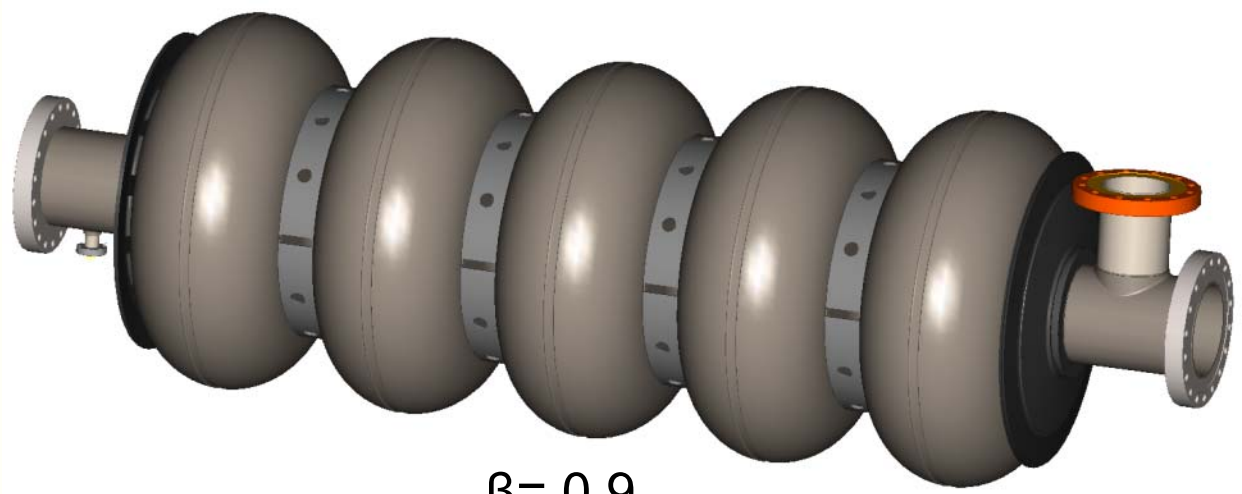

β= 0.9

- **Current Fabrication Status (Baseline V1 design)**
  - **AES * (4) β=0.9 cavities; ordered…..****Received*****
  - **PAVAC * (5) β=0.9 cavities; ordered….**Under Fabrication****

5-Cell Cavities by AES

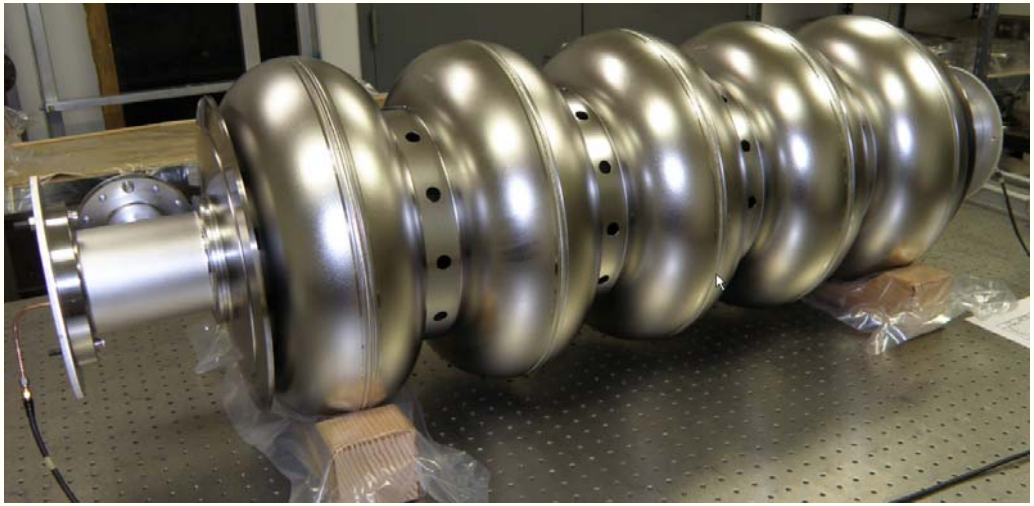

First two beta=0.9 cavities by AES

Photos courtesy of John Rathke - AES

5-Cell Cavities by AES

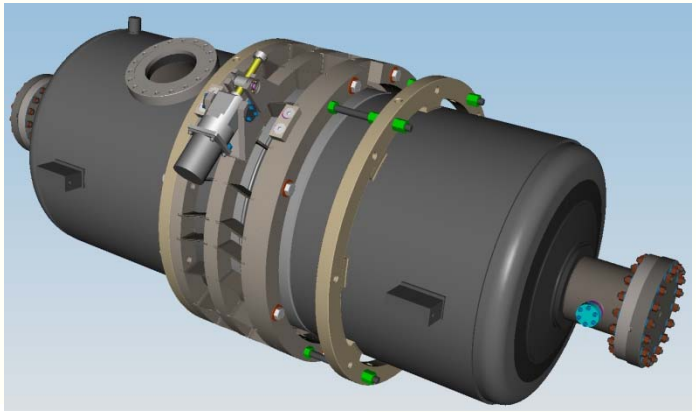

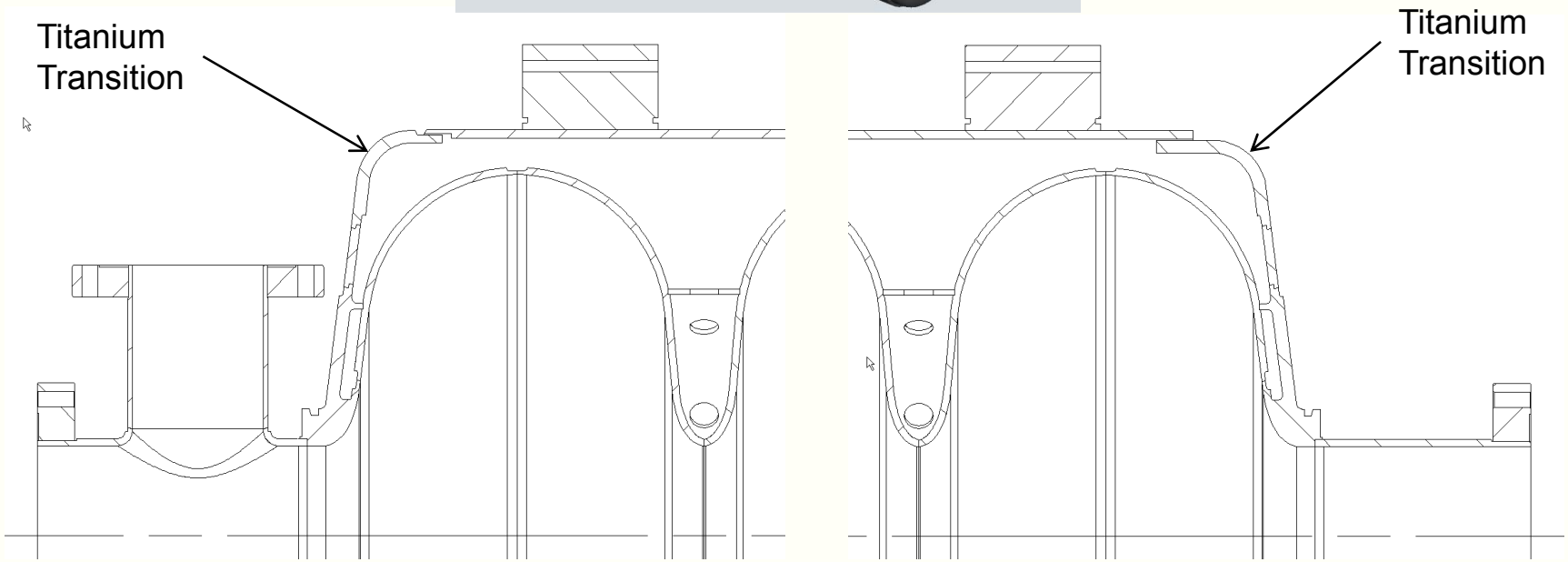

V1 original dressing option with bladetuner

5-Cell Cavities by AES

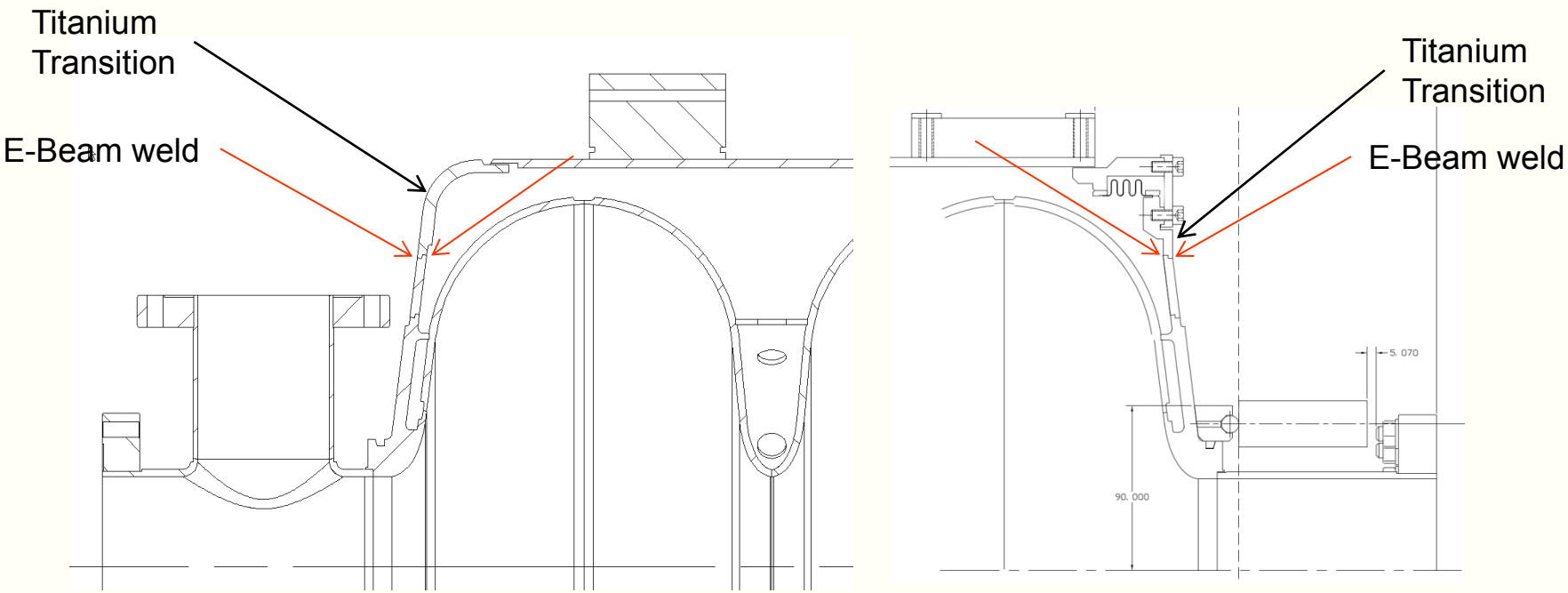

Dressing option reconfigured for end lever tuner

- **New Ti transition at the field probe end**
- **Same Transition at the coupler end**

New 5-Cell Cavity FRS

FERMILAB Project X	Functional Requirement Specification 650 MHz High Beta Superconducting dressed cavity	Doc. No. DocDB 1164 Version 2 Date: 06/06/2013 Page 1 of 10

Functional Requirement Specification for 650 MHz High Beta Superconducting dressed Cavity

EM Parameters

Parameter	Value
Frequency	650 MHz
Shape, number of cells	Elliptical, 5 cells
Geometric beta β_g	0.92
$L_{eff} = 5*(\beta_g\lambda/2)$	1060.8 mm
Iris Aperture	118 mm
Bandwidth	45 Hz
E_{peak} at operating gradient	< 36 MV/m
B_{peak} at operating gradient	< 68 mT
Cavity quality factor Q_0 at 2K	> $2.0*10^{10}$

Tuning Requirements

Parameter	Value
Coarse tuner frequency range	200 kHz
Coarse tuner frequency resolution	2 Hz
Fine tuner frequency range	500 Hz
Fine tuner frequency resolution	0.1 Hz

Operational/Test Requirements

Parameter	Value
Operating node	CW
Max Leak Rate (room temp)	< 10^{-10} atm-cc/sec
Operating gain per cavity	17.7 MeV
Maximum Gain per cavity in VTS	> 21 MeV
Operating power dissipation per cavity at 2 K	< 25 W
Sensitivity to He pressure fluctuations	< 15 Hz/mbar (dressed cavity)
Field Flatness dressed cavity	> 90%
Operating temperature	2.0 K
Operating Pressure	30 mbar
MAWP	2 bar (RT), 4 bar (2K)
RF power input per cavity	up to 100 kW (CW, operating)
Cavity longitudinal stiffness	< 10^4 N/mm
Tuning sensitivity	> 180 kHz/mm

Cavity Design Changes

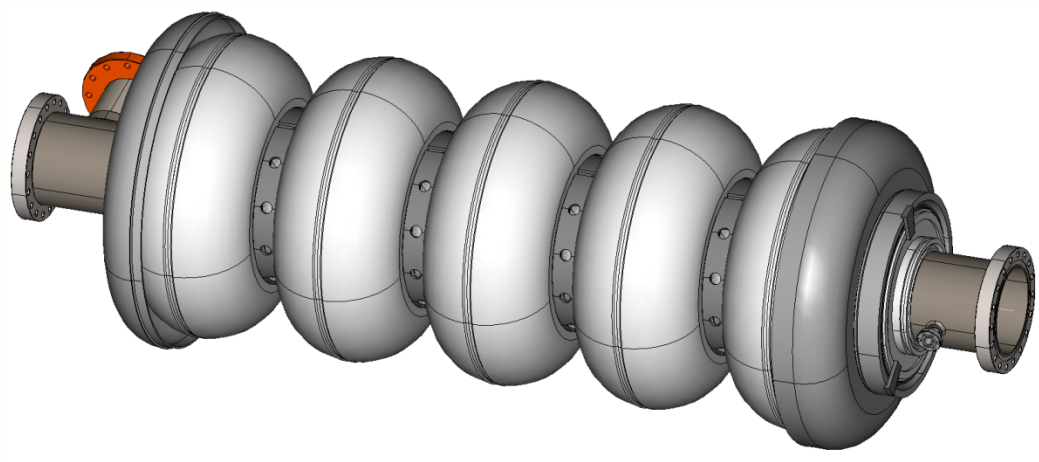

- **Design Changes**
  - Increased Iris and beam tube diameters
  - Cell shape altered with nearly flat sides
  - Stiffening ring radius moved in on mid-cells and end-cells
  - Longer beam tubes to accommodate a lever tuner and extended coupler port
  - Endgroups re-designed for cost reduction
    - Replaced costly Nb “spool” parts with Nb/Ti
  - Reduced He vessel bellow diameter

Cavity Fabrication Costs

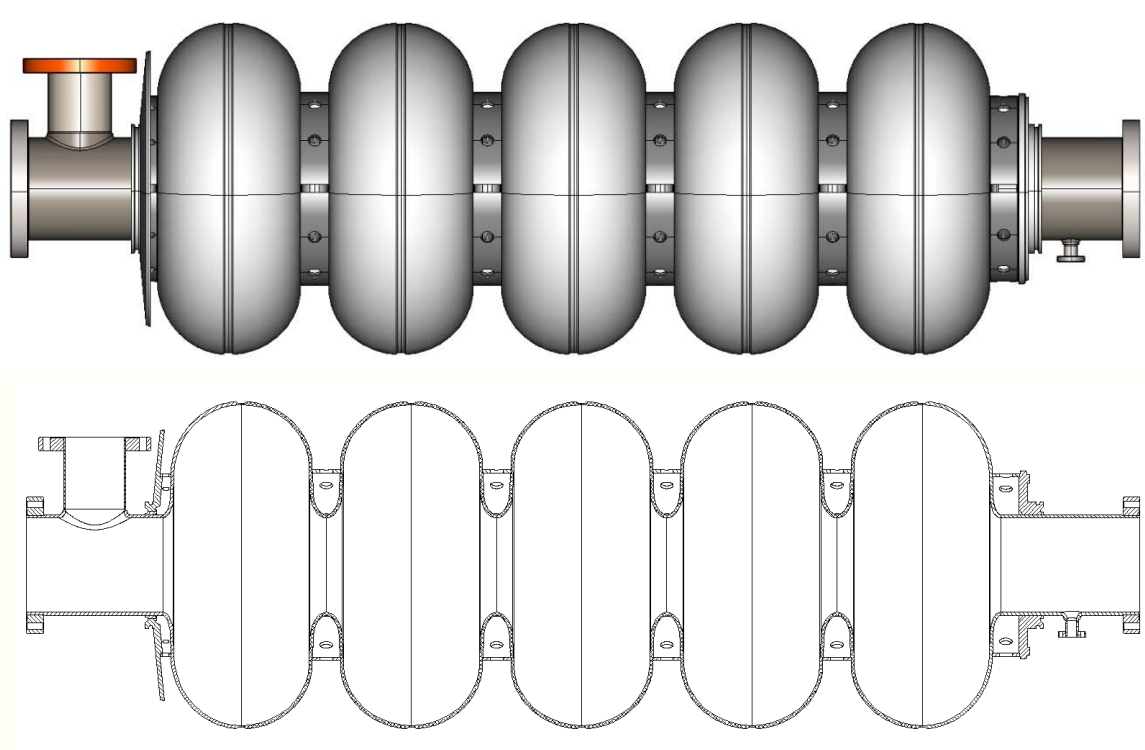

Estimated material and fabrication costs (Nb & Nb/Ti)

- Material: ~$136,870
- Fabrication: ~$65,000-$75,000
- NRE: ~$150,000 - $200,000

(Supplied by Mike Foley)

Cavity End Lever Tuner

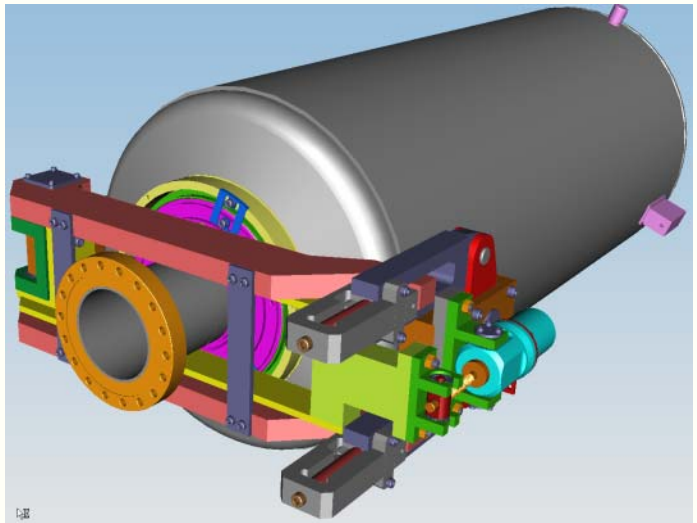

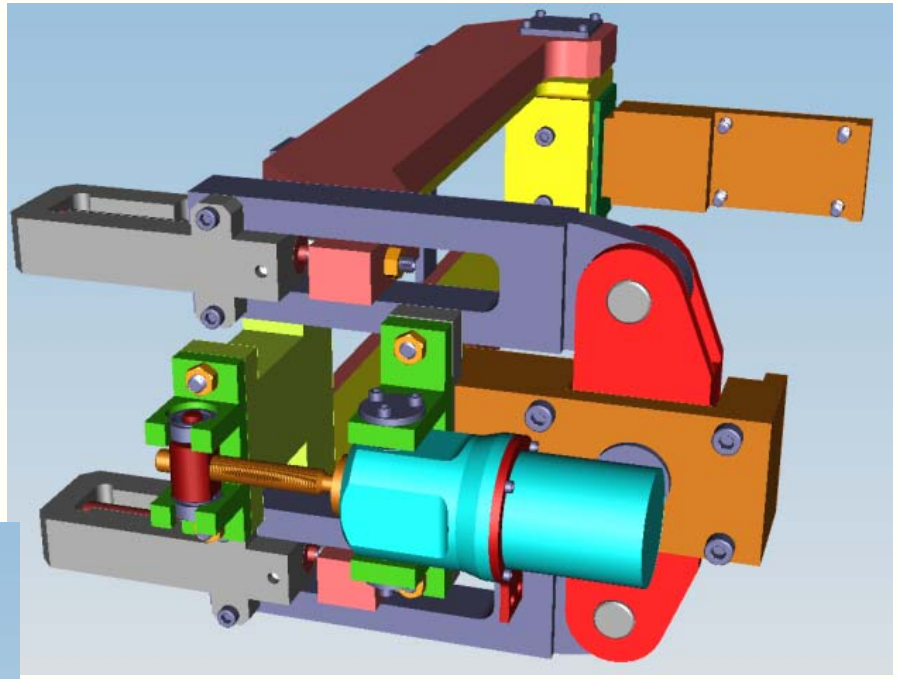

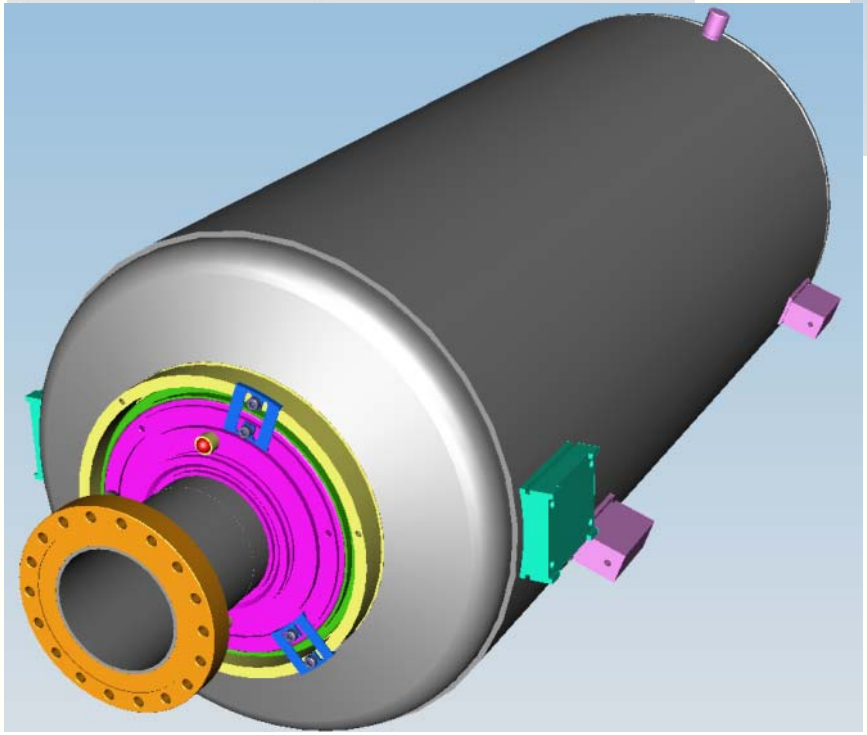

- **Design Changes**
  - Helium vessel diameter and weld sequence for dressing remain unchanged
  - Design allows for access to remove motor from access port in vacuum vessel

What's Next?

- Process single and 5-cell bare cavities
  - Test in VTS
  - Centrifugal Barrel Polishing (Tumbling)
  - HPR, EP, BCP…….Etc.
- Continue fabrication of baseline prototypes V1 & V2
  - Lever Tuner
  - Helium vessels
  - Assembly and welding fixtures
  - V2 Cavity – Under fabrication in India as part of the IIFC
- Dress 5-cell cavity
  - VTS tests
  - Room temperature tests
  - Mechanical test of tuner
  - Eventual HTS
- Continue analysis lever tuner design and V2 cavity
  - RF analysis is complete
  - Mechanical and thermal complete

Project X Beta = 0.9, 650 MHz Cryomodule Status

Yuriy Orlov and Tom Peterson (Fermilab)

Cryomodule requirements - - major components

- Six (6) dressed RF cavities
- Six RF power input couplers
- One intermediate temperature thermal shield
- Cryogenic valves
  - 2.0 K liquid level control valve
  - Cool-down/warm-up valve
  - 5 K thermal intercept flow control valve
- Pipe and cavity support structure
- Instrumentation -- RF, pressure, temperature, etc.
- Heat exchanger for 4.5 K to 2.2 K precooling of the liquid supply flow
- Bayonet connections for helium supply and return
- Nominally 5 K to 8 K thermal intercept helium circuit
- Nominally 40 K to 80 K thermal radiation shield and intercepts

650 MHz Cryomodule cooling scheme (Six cavities!)

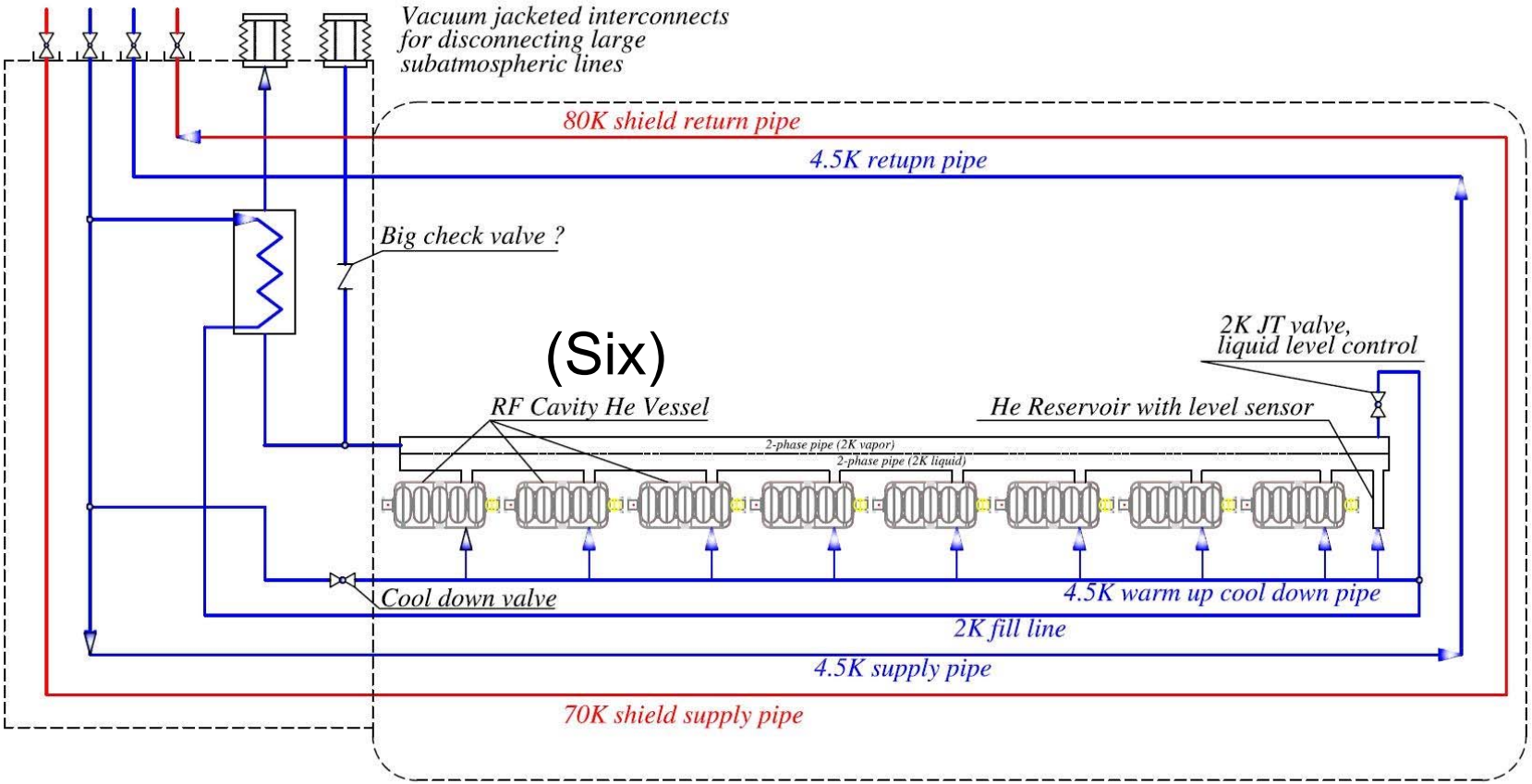

650 MHz Cryomodule (Desy Style, standalone)

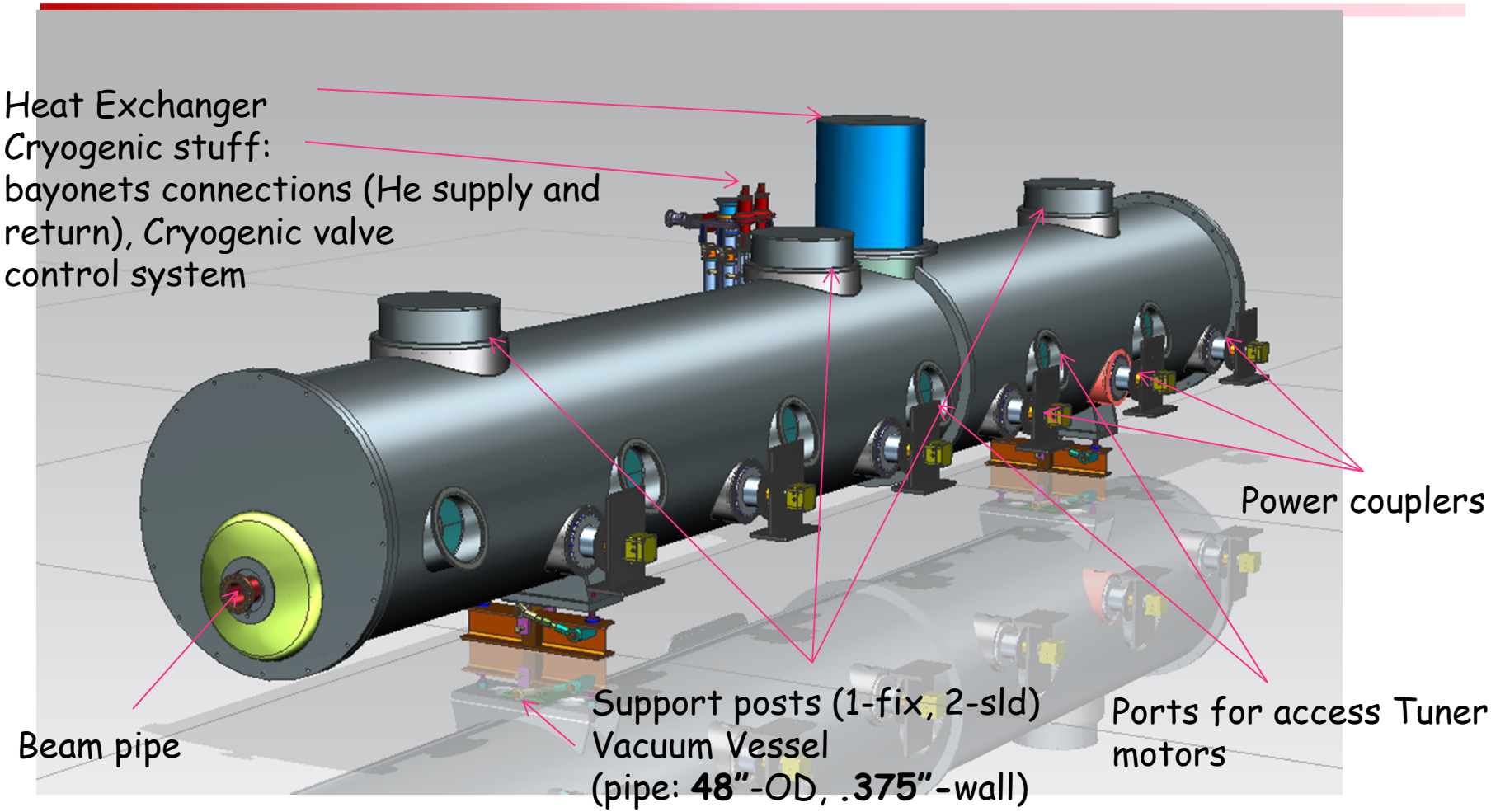

650MHz Cryomodule Layout (Desy Style, standalone)

- Overall length (CS-Flange to Flange)-**9654mm**
- Number of Cavitis-**6**
- Distance between couplers-**1468.9mm**
- Interconnection bellows length-**135.5mm**

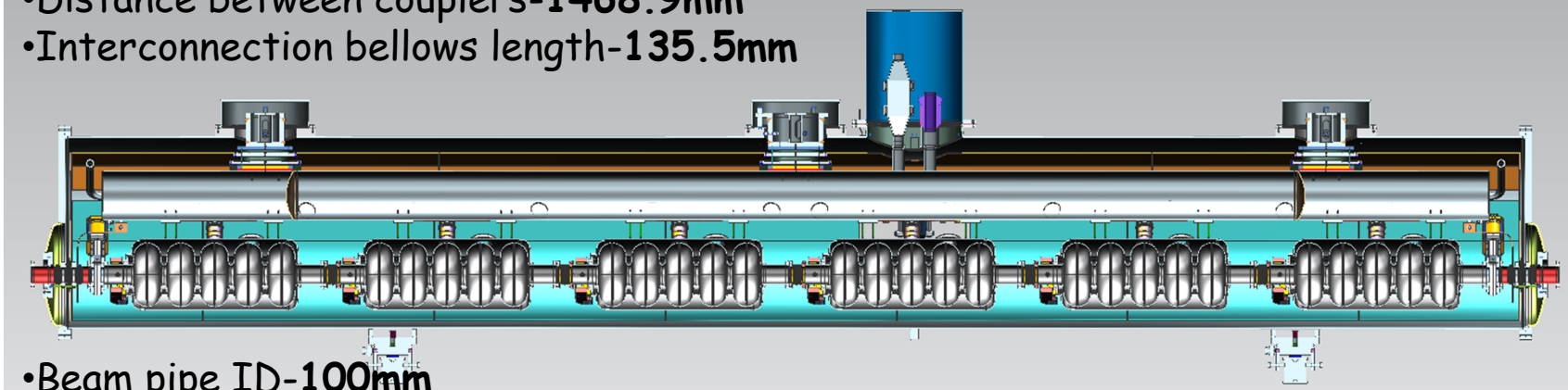

- Beam pipe ID-**100mm**
- **1** gate valve for each end of Beam Pipe (cold)
- Number of Support posts-**3** (1-Fix, 2-Sliding)
- **300mm** pipe (concept) serves as strong back, as the 2-phase helium pipe, also providing a large vapor buffer volume.
- Heat exchanger
- Insulation Vacuum Relief valve

650 MHz Input coupler

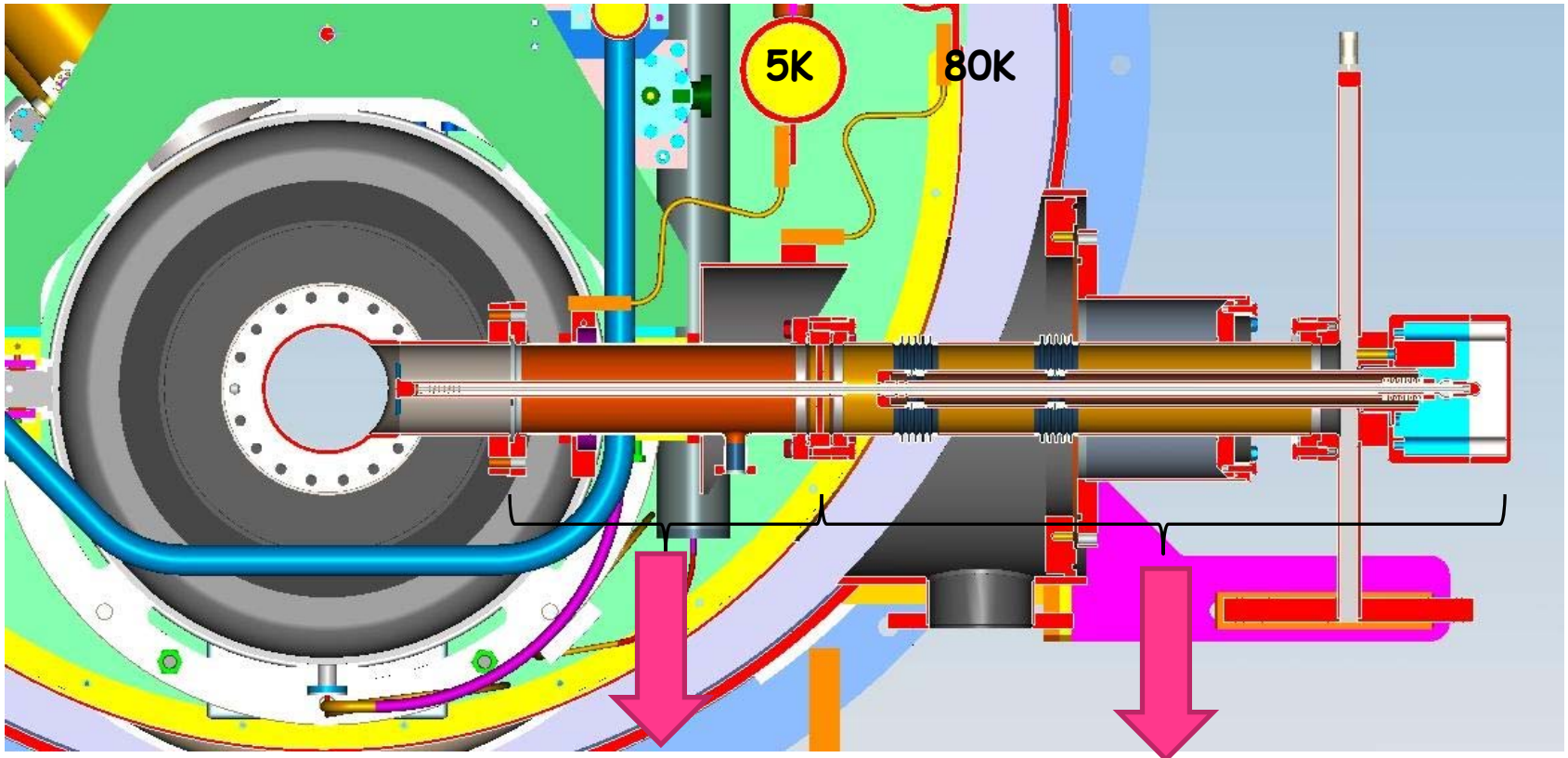

- CW power-**120kW**
- **One** ceramic window

650MHz Cryomodule. Cold Mass

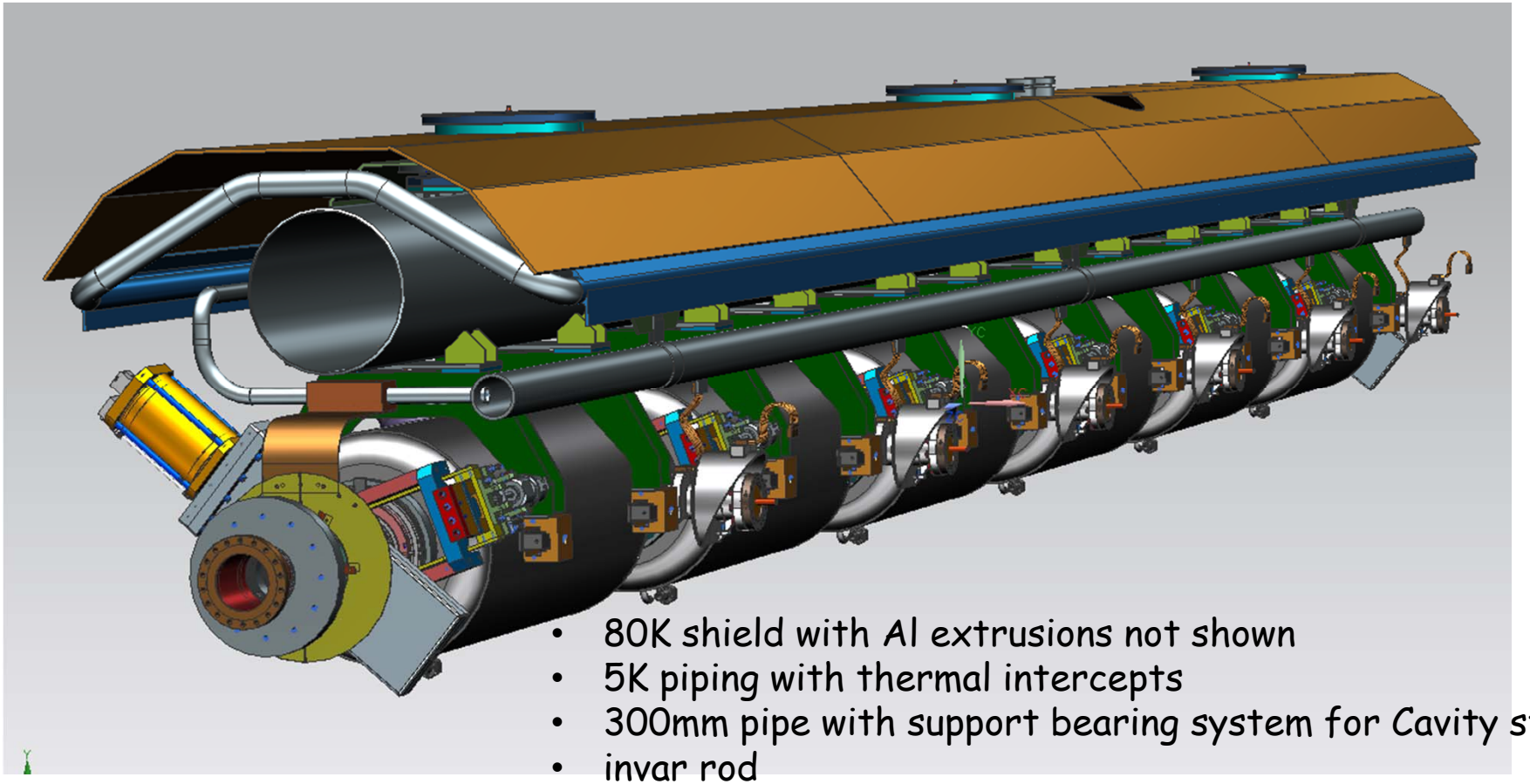

- 80K shield with Al extrusions not shown
- 5K piping with thermal intercepts
- 300mm pipe with support bearing system for Cavity string
- invar rod
- thermal shrinkage compensator (next slide)
- cavity string with Gate valves (cold)

Summary

- SSR2 cavities – two designs have been developed, no fabrication is in-process. No decision yet on choice of β for PIP-II.
- SSR2 cryomodule – conceptual design has been started based largely on the SSR1 cryomodule design.
- 650 MHz low-β single cell cavities – 8 complete, 2 from JLab, 6 from RI.
- 650 MHz low-β cryomodule – no work is in-process.
- 650 MHz high-β single cell cavities – 6 complete from AES, 5 on order from Pavac. 2 have been tested in VTS.
- 650 MHz high-β 5-cell cavities – 4 complete from AES, 5 on order from Pavac.
- No 650 MHz cavities have been dressed, but designs are in-process.
- End lever tuner development for 650 MHz dressed cavities is in-process.
- 650 MHz high-β cryomodule – conceptual design was started, based on 1.3 GHz cryomodule design.