Fermilab

Managed by Fermi Research Alliance, LLC for the U.S. Department of Energy Office of Science

SSR1 misalignment: electric axis measurements and transverse EM fields

Paolo Berrutti

Outline

- SSR1 CMM measurements summary
- SSR1 bead pull measurement and electric axis referencing for jacketed cavities
- SSR1 misalignment EM transverse fields
- Conclusions

CMM Measurements of Concentricity

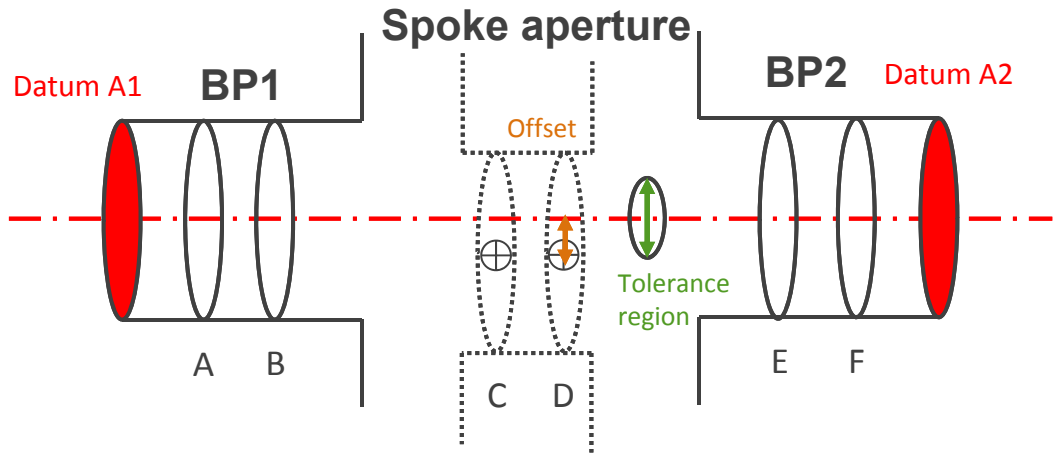

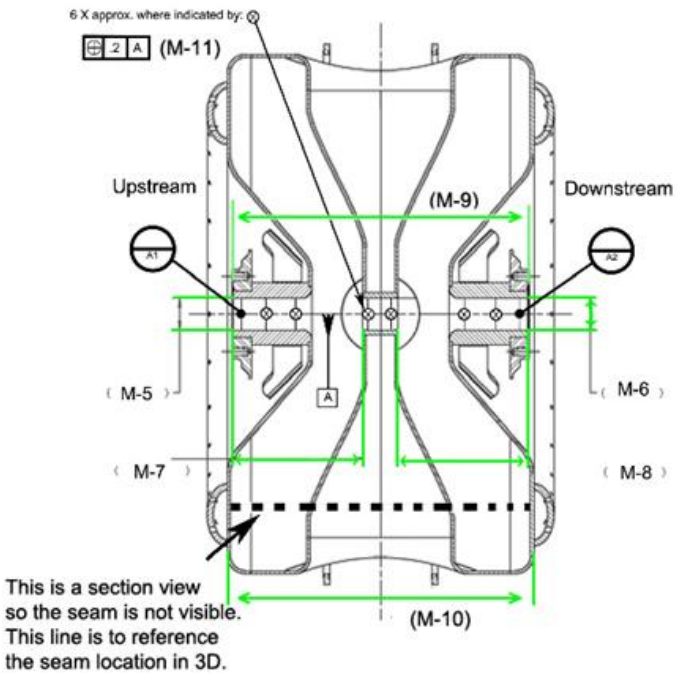

- Datum axis (geometric) is defined with center points of Datum A1 and A2 near beam-pipe flanges
- At 6 locations (A-F) the center points are computed
- Offsets are given relative to Datum axis, corresponding to the geometrical axis of the cavity.

Courtesy of L. Ristori

CMM Measurements on 12 SSR1 Cavities

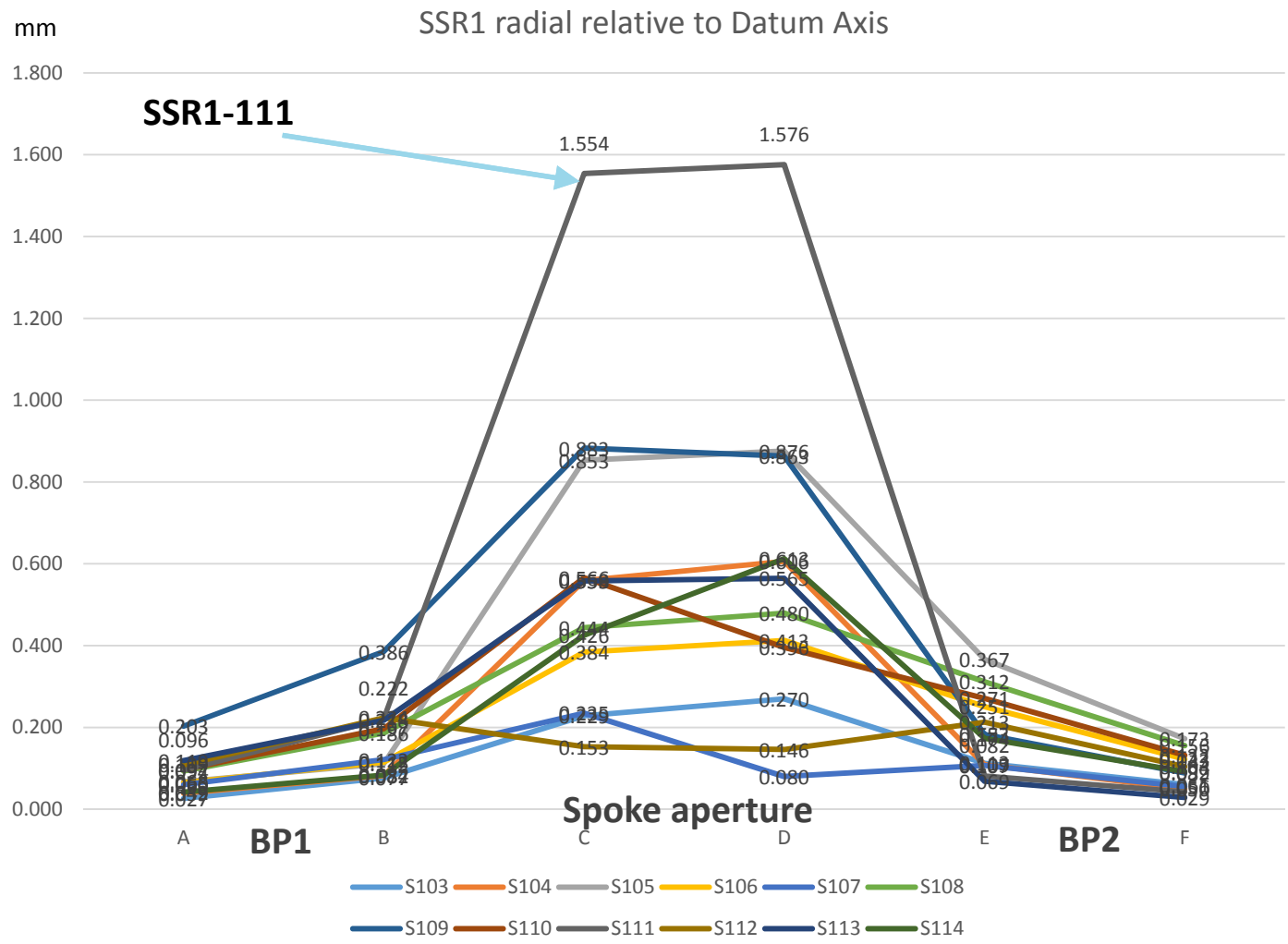

Courtesy of L. Ristori

CMM Summary

- Sections A,B and E,F have smallest offsets as they are rigidly connected to the data A1 and A2.
- Sections C,D have largest offsets as they belong to the spoke aperture.
- 9 Cavities fall within a maximum offset of 0.6 mm.
- Cavities S105 and S109 have an offset of 0.8-0.9 mm.
- Cavity S111 has an offset of ~1.6 mm, bare S111 has been used for simulation since shows the largest misalignment.

Bead pull measurement of electric axis I

- Introducing a metallic bead in the RF volume gives a phase shift $\Delta\varphi$ proportional to the Slater's formula (εE^2-μH^2).
- The electric center is found taking BP measurements along Z, at given offsets on X and Y axis.
- Plotting the field amplitude at each gap as function of X and Y offsets, the electric center is identified with the minimum of the field amplitude.

$\Delta\varphi$ vs Z

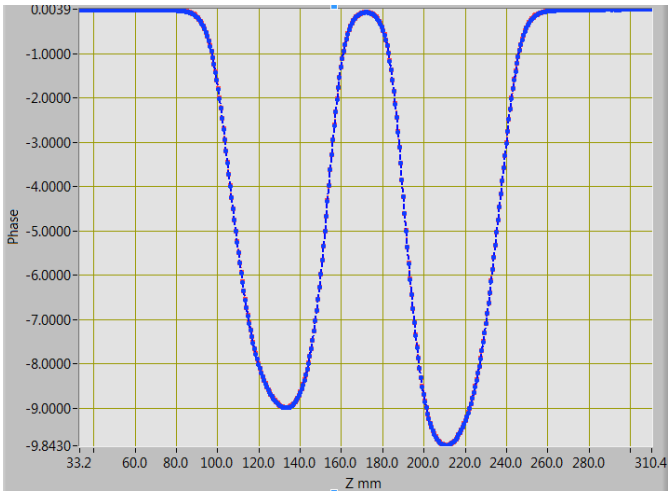

Field vs X Offset at gap1

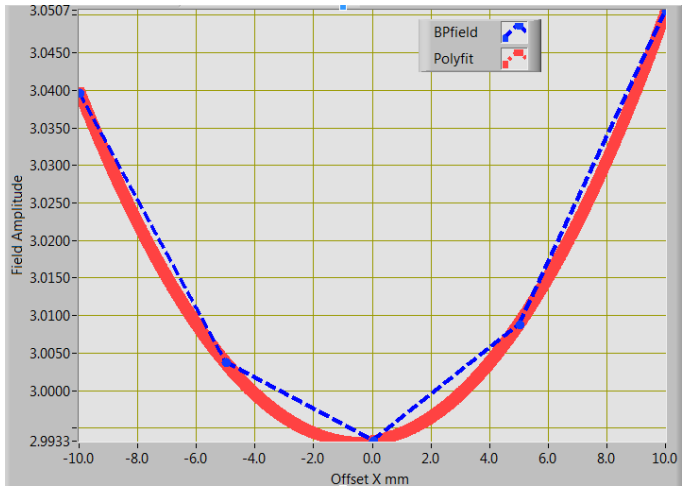

Bead pull measurement of electric axis II

- Once the center has been located the bead line is realigned to the new center location for final measurement.
- The precision of this technique identifies the center within 150 µm.
- After BP measurement the alignment group refers the bead position to the centers of beam pipe flanges, thanks to the fiducials on the helium vessel.

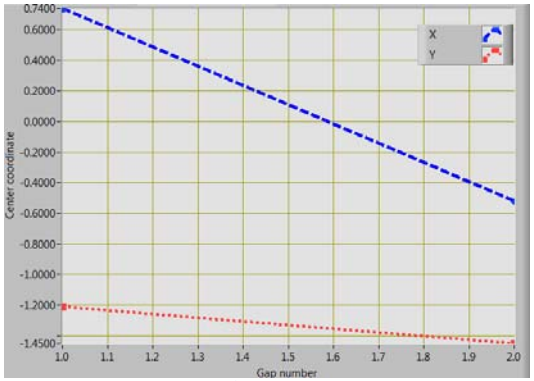

Realignment

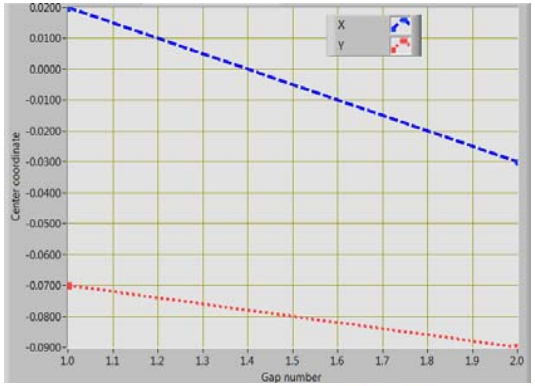

Alignment data

- Alignment data refer the electric center line to the mechanical center, defined as the center of the two beam ports.
- They can be several millimeters apart as shown in the table below (red fields).

SSR1-111 alignment data

The local coordinate system has the following axes orientation:
Origin = Cavity Center (midpoint between Flanges and on Electrical Axis)
X = positive beam right when looking downstream beam line
Z (stationing) = positive downstream beam line - line built on Electrical Centers
Y = positive upward when looking downstream beam line (and orthogonal to the beam)

NAME	X [mm]	Z [mm]	Y [mm]	Comments
STAGE_B_WIRE	0.351	-627.087	0.414	UPST Wire Stage
Bead UPSTRM	0.000	-146.111	0.000	Electrical Center
UPST-Flange_Ctr	0.035	-145.703	**-2.082**	Mechanical Center
S1H-NR-111-A_LL3	-130.736	-102.919	300.685	Fiducials
S1H-NR-111-A_LL4	129.106	-101.993	300.692	Fiducials
S1H-NR-111-A_LL8	-149.073	-62.977	294.864	Fiducials
S1H-NR-111-A_LL7	-297.641	-62.306	146.304	Fiducials
S1H-NR-111-A_CT	0.000	0.000	0.000	Origin
S1H-NR-111-A_LL6	-150.053	56.931	295.932	Fiducials
S1H-NR-111-A_LL5	-298.672	57.577	147.296	Fiducials
S1H-NR-111-A_LL1	-132.327	96.717	302.449	Fiducials
S1H-NR-111-A_LL2	127.642	97.999	302.458	Fiducials
Bead DNSTRM	0.000	144.905	0.000	Electrical Center
DNST-Flange_Ctr	-2.455	145.704	**0.531**	Mechanical Center
STAGE_A_WIRE	-0.340	680.927	0.573	DNST Wire Stage

Courtesy of V. Bocean

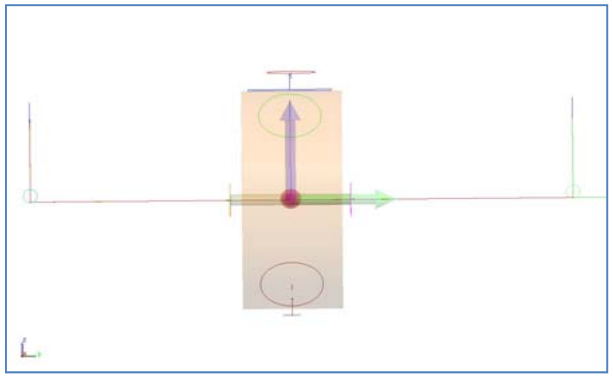

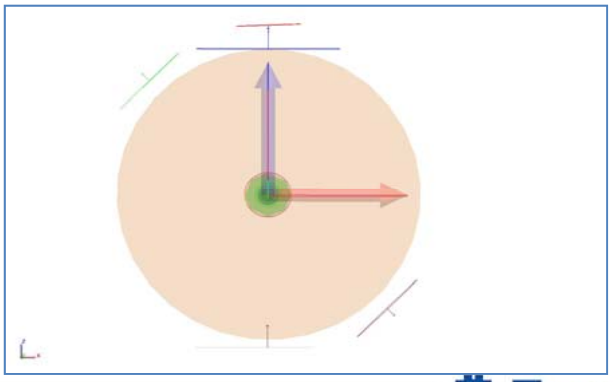

Reason for SSR1-111 Misalignment Simulation

- The offset between electric and mechanical center can be significantly large for SSR1 resonators.
- It is necessary to understand what changes in term of transverse fields and kicks for particles traveling through the cavity, either on electric or on geometrical center.
- Bead pull measurements for SSR1 are taken in the high electric field region and $|E| \approx E_z$, it is necessary to simulate the EM field to have information on the transverse components.

SSR1 |E| field

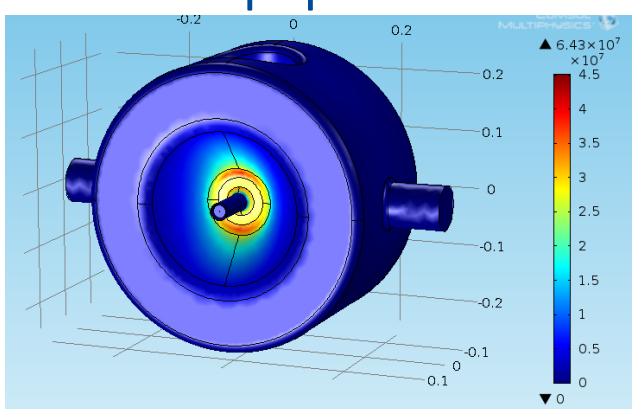

SSR1 E_z field

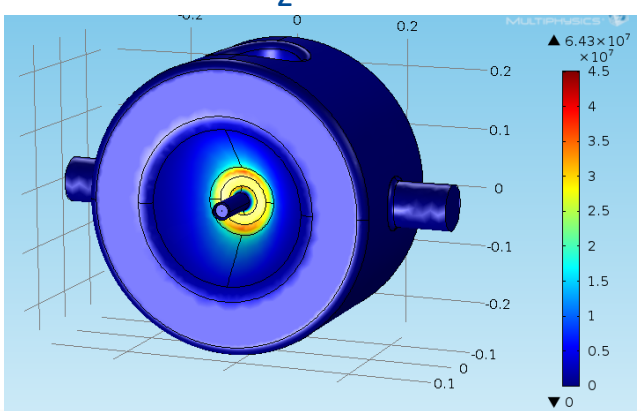

Misalignment simulation of bare SSR1-111 I

- The misalignment data has been taken from the full CMM report, having X, Y and Z coordinates for all the measured data.
- Beam tubes and electrode displacement and tilt on both transverse axes have been taken into account.
- Length in mm, angle in rad.

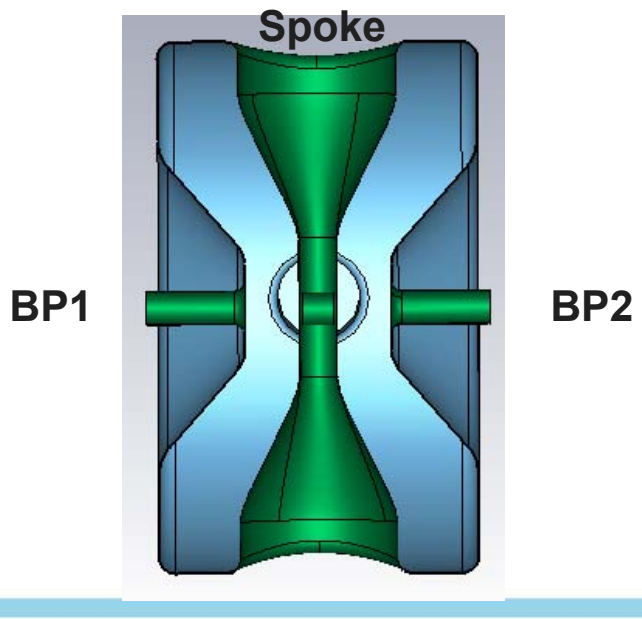

	BP1		Spoke aperture		BP2	
Datum	A	B	C	D	E	F
X	-112.468	-82.111	-8.839	9.162	82.44	111.797
Y	0.071	0.173	-0.156	-0.026	0.002	0.006
Z	-0.065	-0.138	-1.546	-1.575	-0.082	-0.042

BP1		Spoke aperture		BP2	
x_off	0.122	x_off	-0.091	x_off	0.004
y_off	-0.102	y_off	-1.561	y_off	-0.062
y_angle	0.193	y_angle	-0.414	y_angle	0.008
x_angle	-0.138	x_angle	0.092	x_angle	0.078

Misalignment simulation of bare SSR1-111 II

- The simulation results (bare cavity) are very similar to the electric center found with bead pull on the jacketed resonator.
- The cavity has been shipped, tuned multiple times, and welded in the He jacket since the CMM data was taken.
- 1 mm max discrepancy between simulation and bead pull center seems reasonable.

SSR1-111 bare Simulation data		
BP	X [mm]	Y [mm]
1	1.091	-2.347
2	-2.817	0.311

SSR1-111 jacketed Alignment data		
BP	X [mm]	Y [mm]
1	0.035	-2.082
2	-2.455	0.531

Center Gap 1 X axis

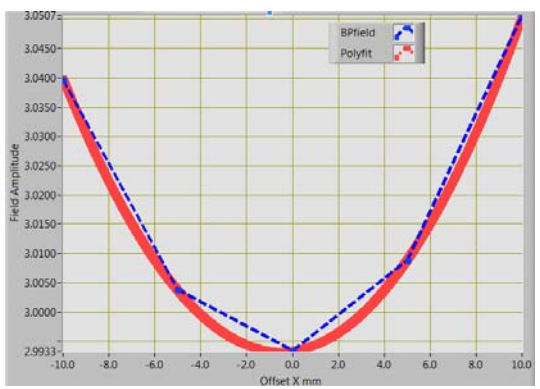

Center Gap 1 Y axis

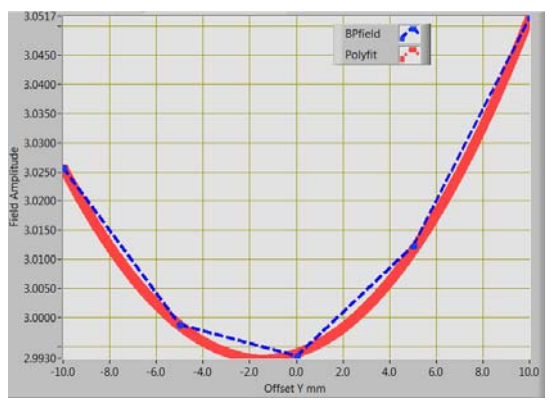

X and Y gap center

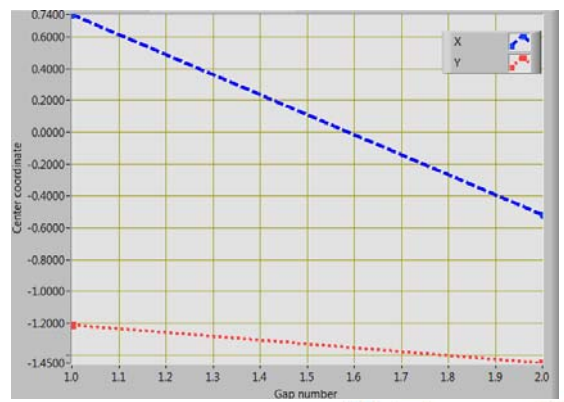

Transverse Fields on mechanical and electric center

- The transverse fields amplitude on cavity axis are zero for an ideal cavity, the misalignments introduce a field perturbation on both transverse axes.
- Transverse fields on cavity axis are shown below (for SSR1-111), the electric field is on the left, the magnetic on the right, dashed lines represent fields on the electric axis, the solid lines represent fields on geometrical (datum, slide3) axis.

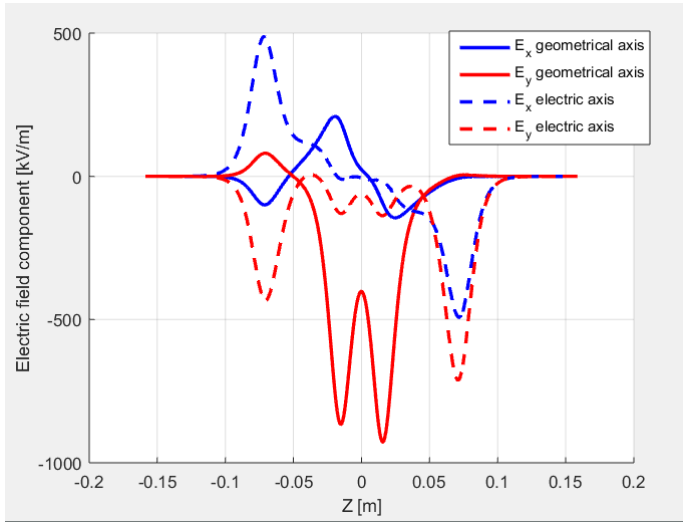

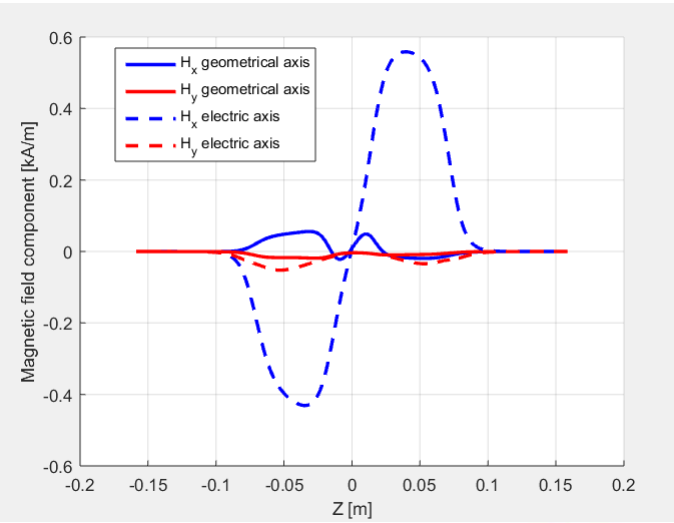

Transverse Kick on mechanical and electric center

- Transverse momentum gain has been calculated for a particle traveling at β=0.21 on geometrical (left) and electric (right) axis.
- The transverse kick amplitude does not drop significantly going from geometric to electric axis.

$\Delta p_\perp$ geom. axis

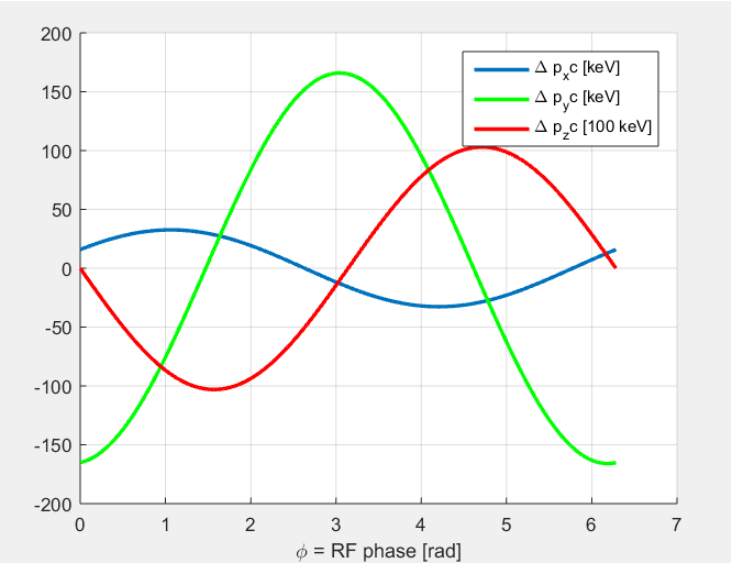

$\Delta p_\perp$ elec. axis

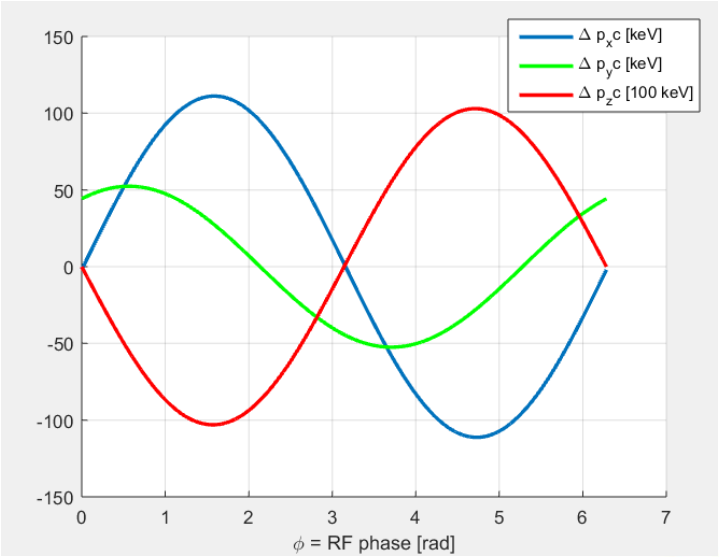

Angle $\Delta p_\perp/p_z$

- Transverse kick (left) and $\Delta p_\perp/p_z$ (right) have been plotted for the SSR1 section of PIP-II using particle beta and synchronous phase from the lattice design. The energy gain per cavity is kept at its maximum.
- The maximum $\Delta p_\perp/p_z$ (≈ 0.8 mrad) occurs at the beginning of the SSR1 section, it should not be a problem since the dipole corrector can manage easily ≈ 10 mrad.

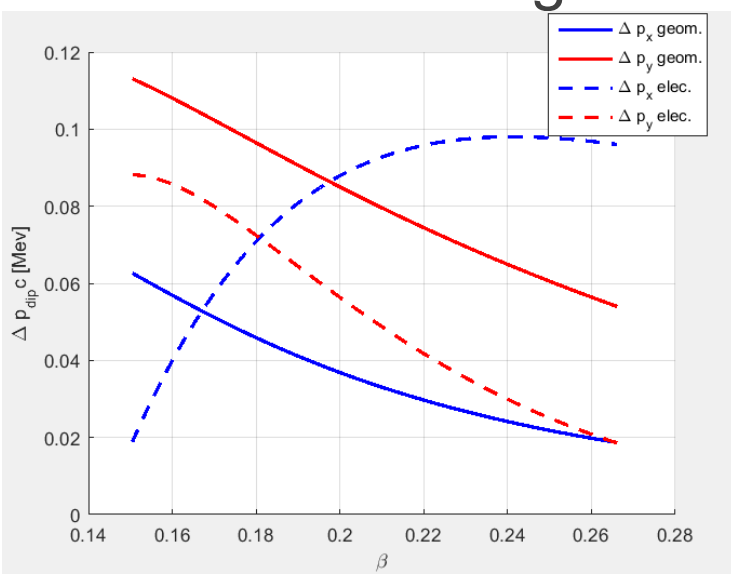

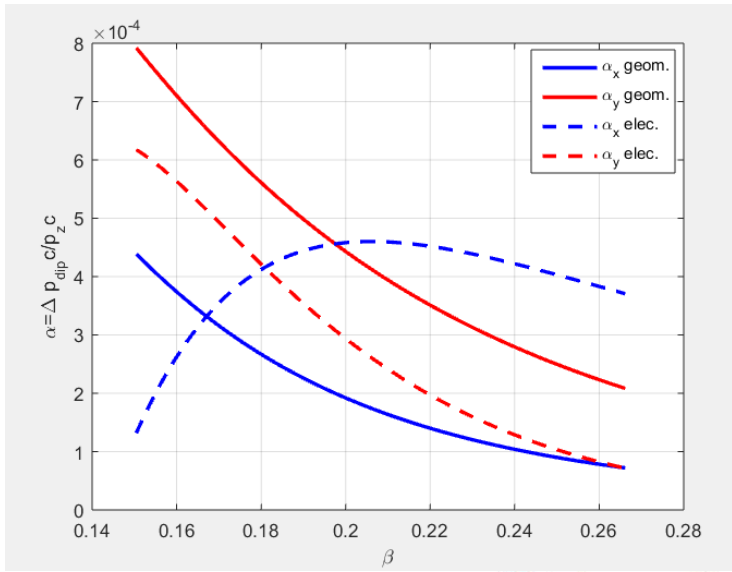

Multipole expansion

- The transverse kick can be expanded in multipoles, once the transverse fields have been extracted on a cylindrical parallel to the axis.

Multipoles expansion of $\Delta p_\perp$ around the geometric axis, β=0.21 phase= $\pi/4$

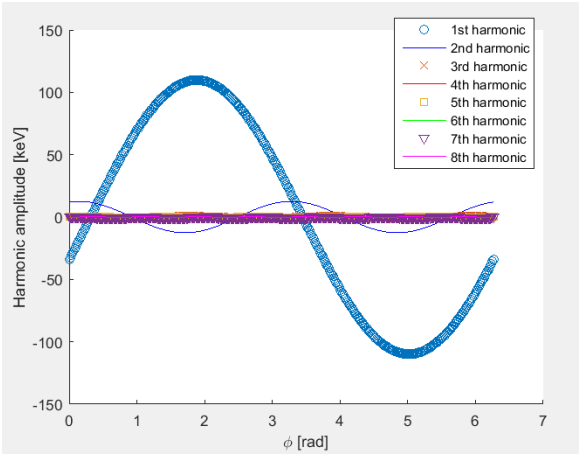

Multipoles expansion of $\Delta p_\perp$ around the electric axis, β=0.21 phase= $\pi/4$

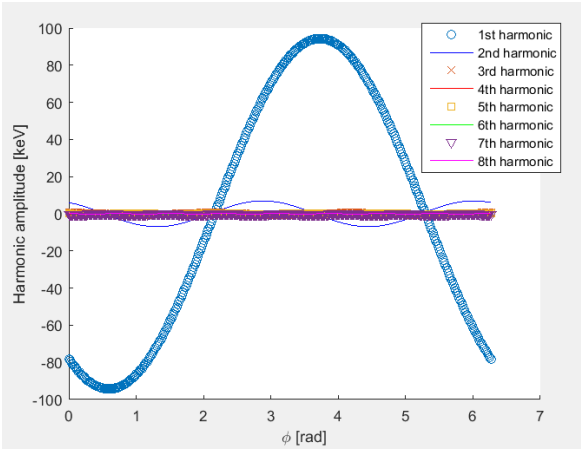

Cylindrical surface aligned to geometrical axis, max r=13.5 mm due to spoke displacement.

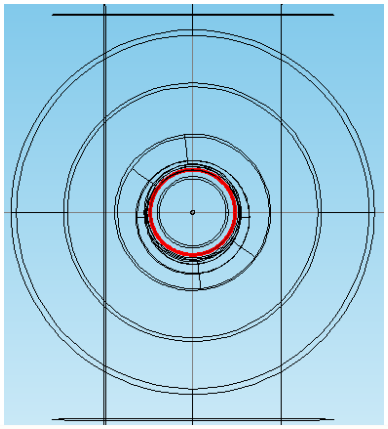

Cylindrical surface aligned to electric axis. Max r=12.2 mm Aperture is reduced 2.6 mm.

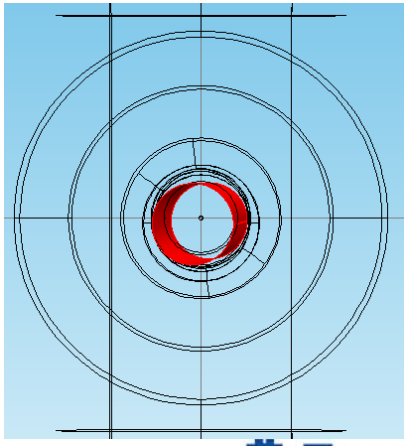

Conclusions

- SSR1 cavities come from the vendor with non negligible misalignments between beam tubes and spoke aperture, measured with CMM.
- The offset between geometric and electric axis, measured with bead pull, can be significantly large.
- $\Delta p_{\perp}$ induced on particles, traveling on geometric and on electric axis, have been found to be within the dipole corrector range.
- Since aligning the cavities to the electric axis would bring a reduction in aperture, alignment to the geometric axis might be the best option.