SSR1 Cryomodule Status
PIP-II Meeting

Tom Nicol
December 17, 2013

PXIE Beamline

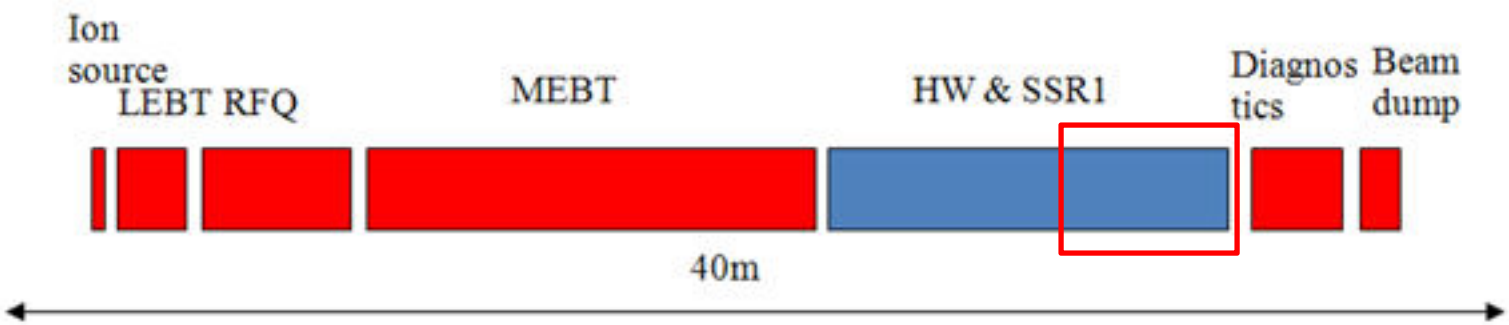

SSR1 Cryomodule Functional Requirements Specification

Fermilab	Project X SSR1 Cryomodule Functional Requirements Specification	Doc. No. TBD DRAFT 0 Date: 10/9/2011 Page 1 of 7

Fermilab

Project X
SSR1 Cryomodule
Functional Requirements Specification

Prepared by: R. Kephart	Fermilab Directorate/PX Office	Extension X3135
Approved by: V. Yakovlev, Department Head	Fermilab TD/SRF	Extension X3906
Approved by: V. Lebedev, CW Linac Scientist	Fermilab AD/Project X	Extension X2558
Approved by: R. Kephart, SRF Director. PX CW Linac	Fermilab Directorate	Extension X3135
Approved by: S. Nagaitsev, Project Scientist	Fermilab AD/Project X	Extension X4397
Approved by: J. Kerby, Project X Project Engineer	Fermilab TD/Project X	Extension X3595
Approved by: S. Holmes, Project X Project Manager	Fermilab APC/Project X Office	Extension X3988

This document is uncontrolled when printed. The current version is maintained on the Project X website.

http://projectx-docdb.fnal.gov:8080/cgi-bin/ShowDocument?docid=931

SSR1 Cryomodule Engineering Risk Assessment

Engineering Risk Assessment

Project: PXIE SSR1 Cryomodule
Lead Engineer: Tom Nicol
Department: TD/SRF
Date: February 27, 2012

Driven mainly by "not off-the-shelf" technology and resource availability

		Engineering Risk Element							High		
	Chapter	A	B	C	D	E	F	G	Risk	Subtotal	Assessment
1	Requirements and Specifications	4	2				3		≥10	9	Standard Risk
3	Requirements and Specification Review	4	2		4	3	3		≥16	16	High Risk
4	System Design	4	2	3		3	3	3	≥19	18	Standard Risk
5	Engineering Design Review	4	2	3		3	3	3	≥19	18	Standard Risk
6	Procurement and Implementation		2		4	3	3	3	≥16	15	Standard Risk
7	Testing and Validation	4				3	3	3	≥13	13	High Risk
8	Release to Operations						3		≥4	3	Standard Risk
9	Final Documentation		2				3		≥7	5	Standard Risk

Project Risk Element								High		
H	I	J	K	L	M	N	O	Risk	Subtotal	Assessment
3	4	2	1	1	3	1	3	≥25	18	Standard Risk

Driven mainly by testing requirements

Engineering Risk Elements	
A	Technology
B	Environmental Impact
C	Vendor Issues
D	Resource Availability
E	Safety
F	Quality Requirements
G	Manufacturing Complexity

Project Risk Elements	
H	Schedule
I	Interfaces
J	Experience / Capability
K	Regulatory Requirements
L	Project Funding
M	Project Reporting Requirements
N	Public Impact
O	Project Cost

Conceptual Design Review Report

SSR1 325 MHz Cryomodule Conceptual Design Review Report

Review Date: February 5th, 2013

Report Date:

Reviewers: Tug Arkan, Rodger Bossert, Tom Page, Allan Rowe

Charge to Review Committee

Review the conceptual design of the SSR1 cryomodule under development for PXIE and comment and provide guidance as appropriate. There are several aspects of this design that represent departures from more conventional cryomodule designs and we would appreciate your input. This will not be a final design review and, as such, will not include detailed structural and thermal analyses, unless needed for the level of this review. We will not cover the dressed cavity and tuner or the input coupler because these have been or will be covered in separate reviews.

Summary

A detailed conceptual design was presented for a cryomodule containing eight 325 MHz single-spoke resonators and four focusing lenses. The primary concepts presented include the overall cryomodule mechanical structure and layout with an overview of preliminary finite element analyses, the focusing lens design and development plans, and two options for the current leads supplying power to the focusing lens. Details of the SSR1 cavities, tuners, and couplers were not discussed.

There are several design features of the SSR1 325 MHz conceptual design that depart from the XFEL/ILC 1.3 GHz and the JLab space-frame style cryomodules. Of particular importance is the bottom-mounted

SSR1 Cryomodule Design and Development Goals

- Validate new spoke cavity cryomodule design concepts.
  - Room temperature strongback.
  - Individual support posts to control axial motion.
  - Conduction cooled magnet current leads (not new, but new to us).
  - Single-window coaxial input coupler.
  - Integral beam instrumentation.
  - …
- Gain experience with the required alignment tolerances.
- Estimate static and dynamic heat loads.
- Check alignment stability during cooldown.
- Minimize risk ahead of full Project X design and production effort by gaining experience with strings of spoke cavities, solenoids, and beam instrumentation, e.g. cleanroom operations, final assembly in the vacuum vessel, shipping and handling, etc.
- Determine the practicality of tuner access ports.

Cryomodule Piping Schematic

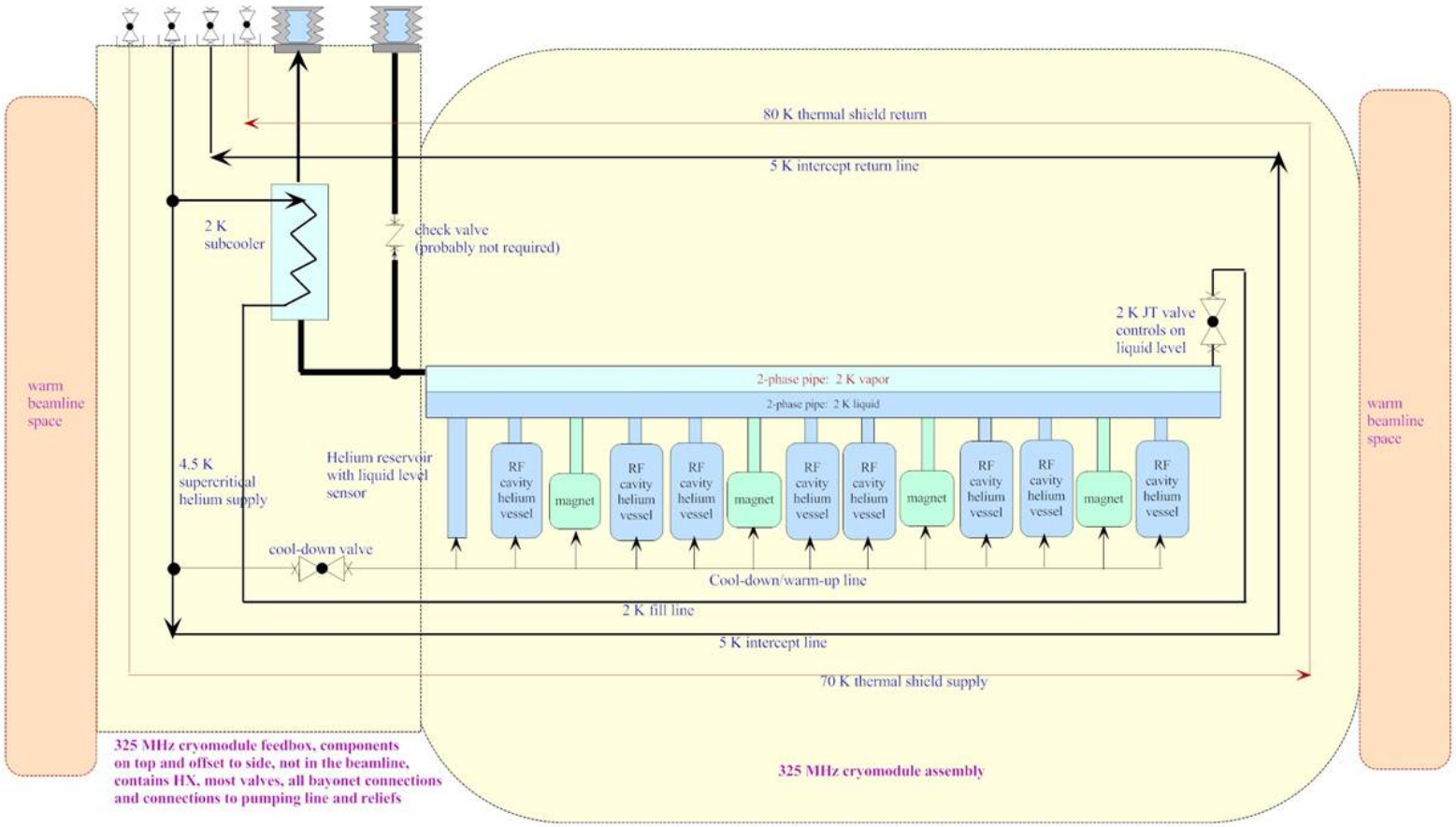

SSR1 Cryomodule for PXIE (aisle side)

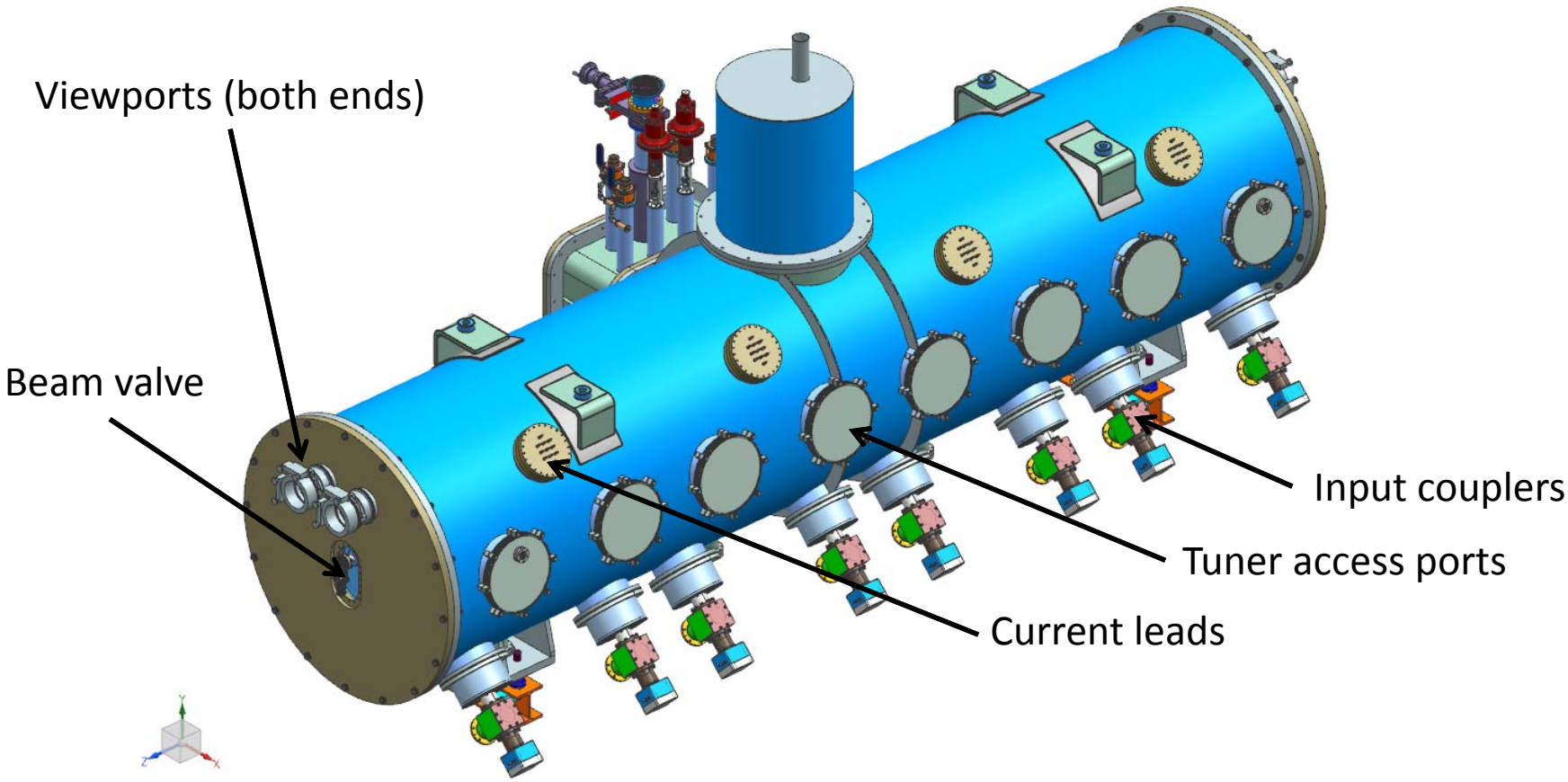

SSR1 Cryomodule for PXIE (wall side)

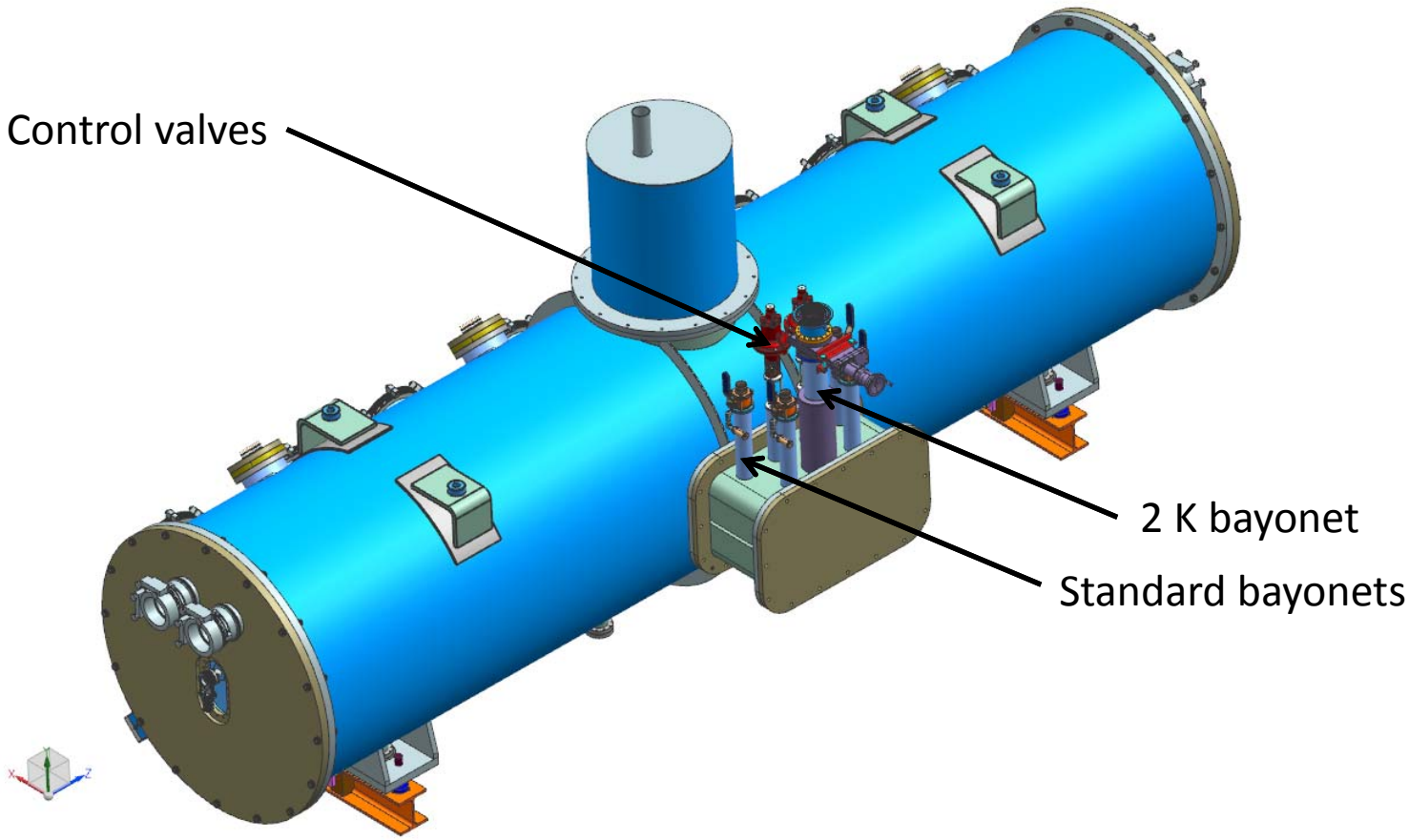

SSR1 Cryomodule for PXIE

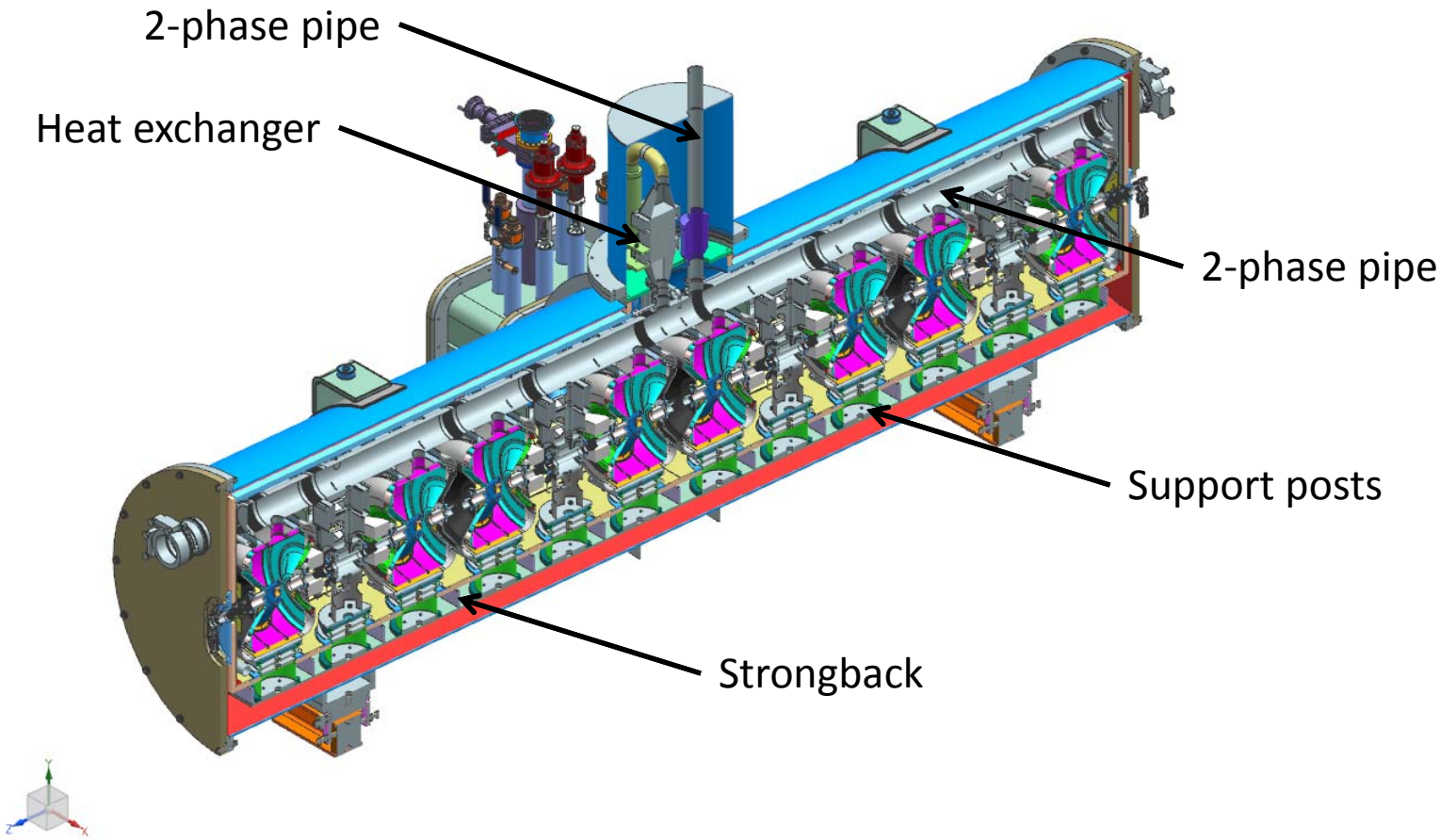

SSR1 Cavity String Details

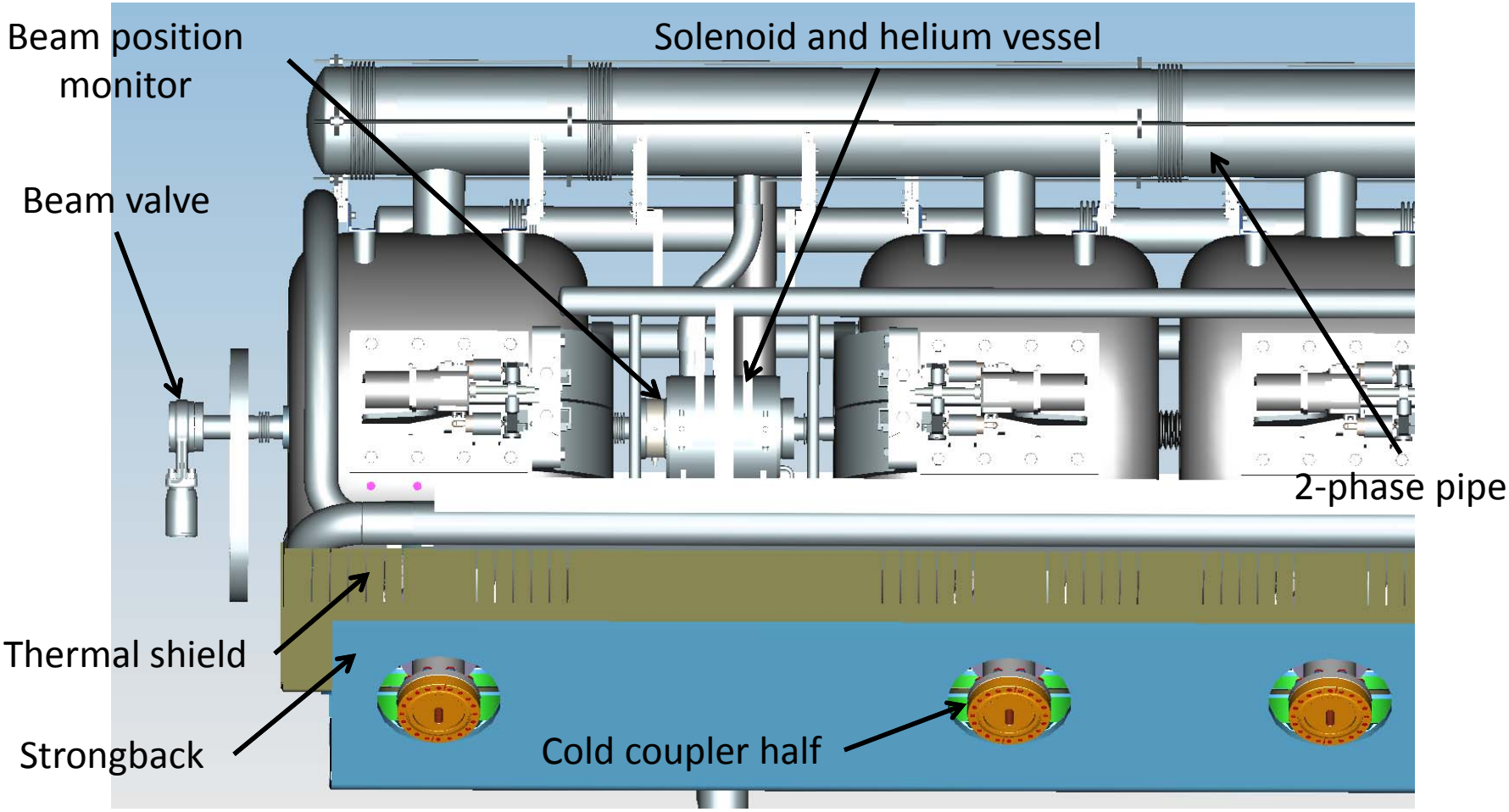

SSR1 Cavity String Spacing

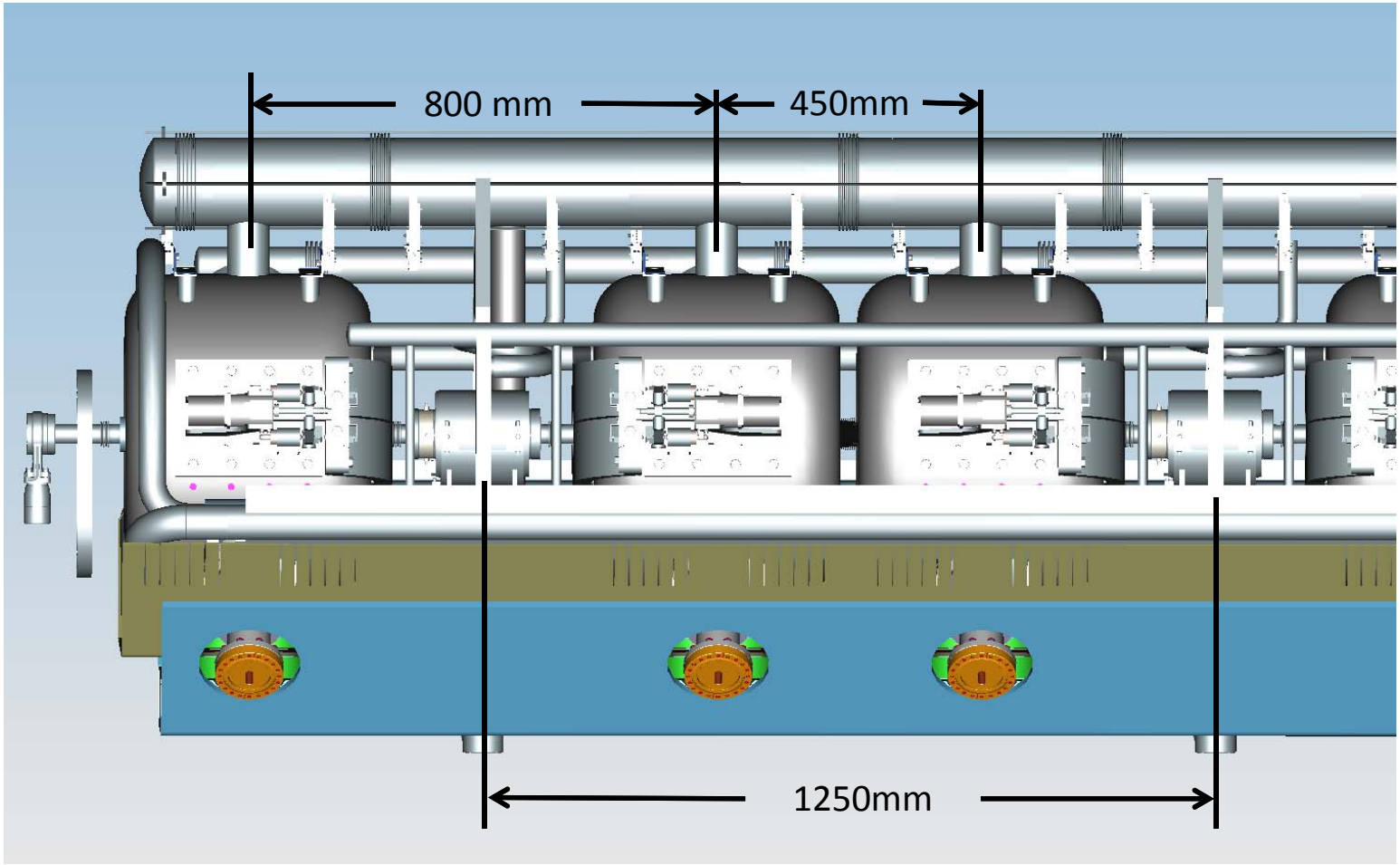

SSR1 Cavity and Helium Vessel

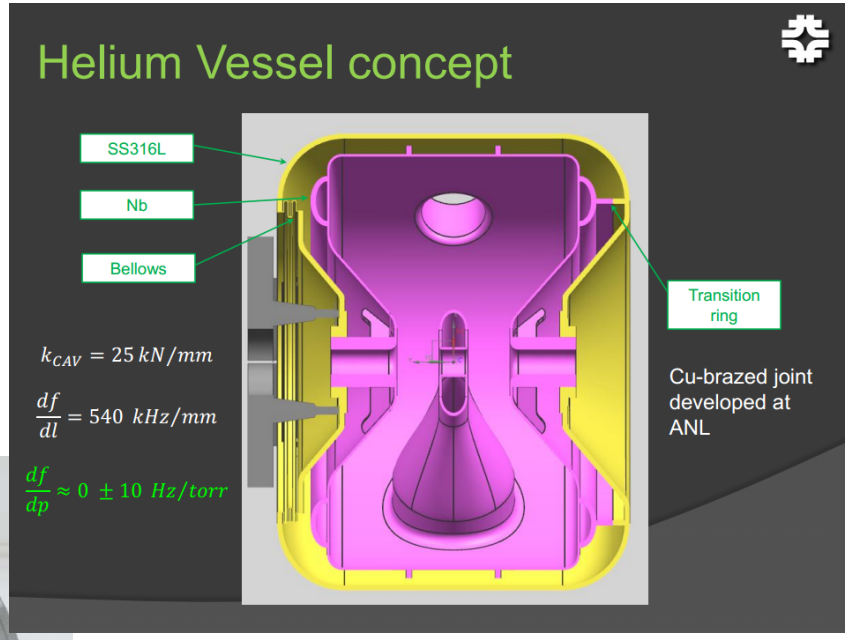

VTS Qualification @ 2K – 9/9 qualified

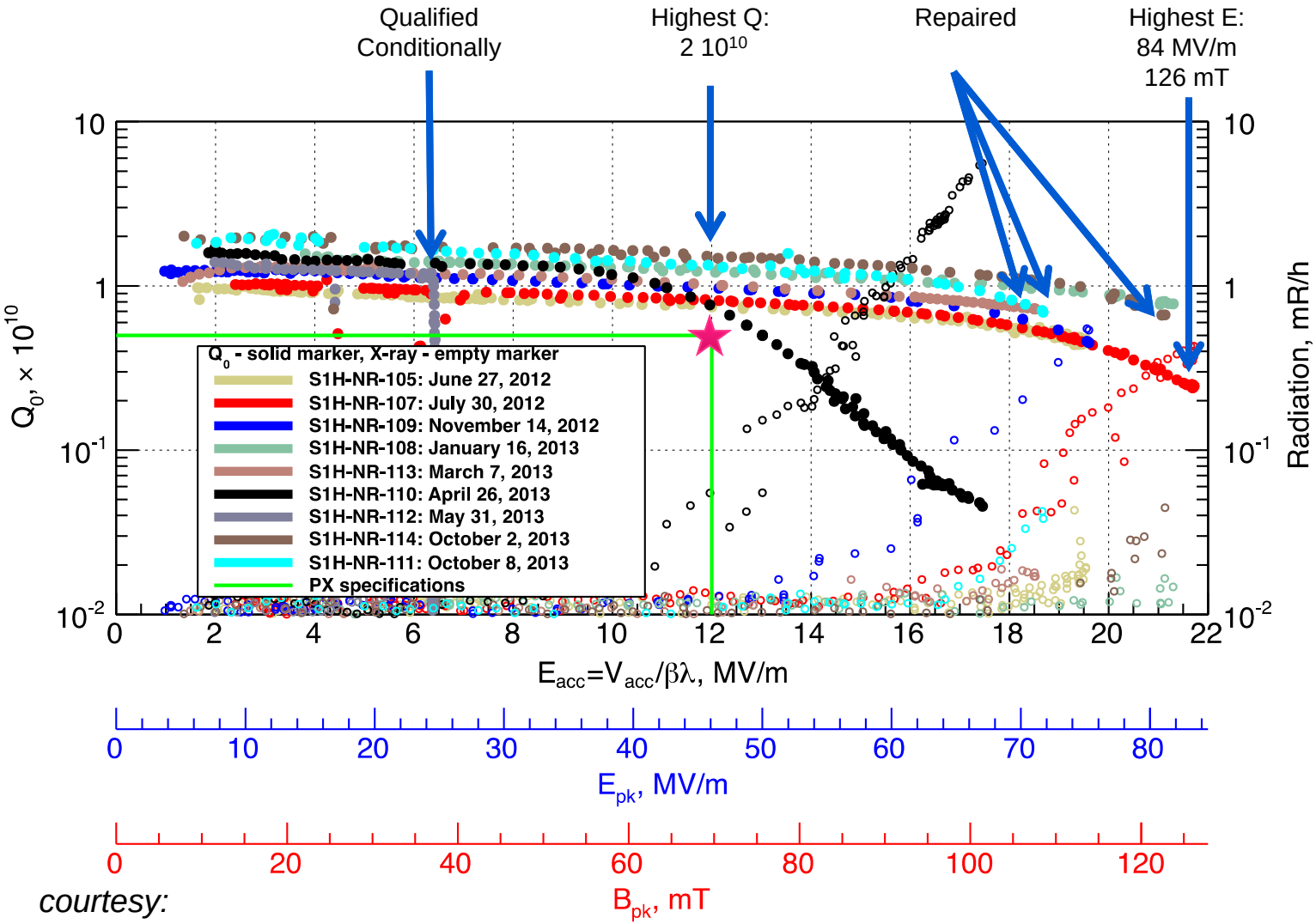

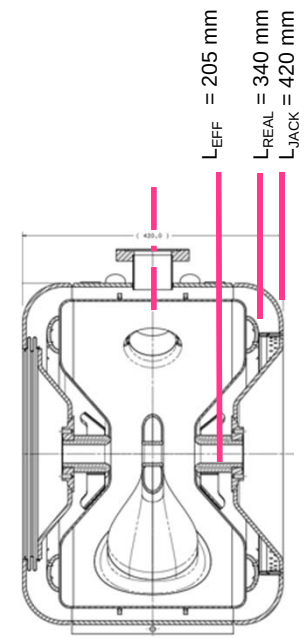

courtesy:
A. Sukhanov

SSR1 Cryomodule Focusing Solenoid

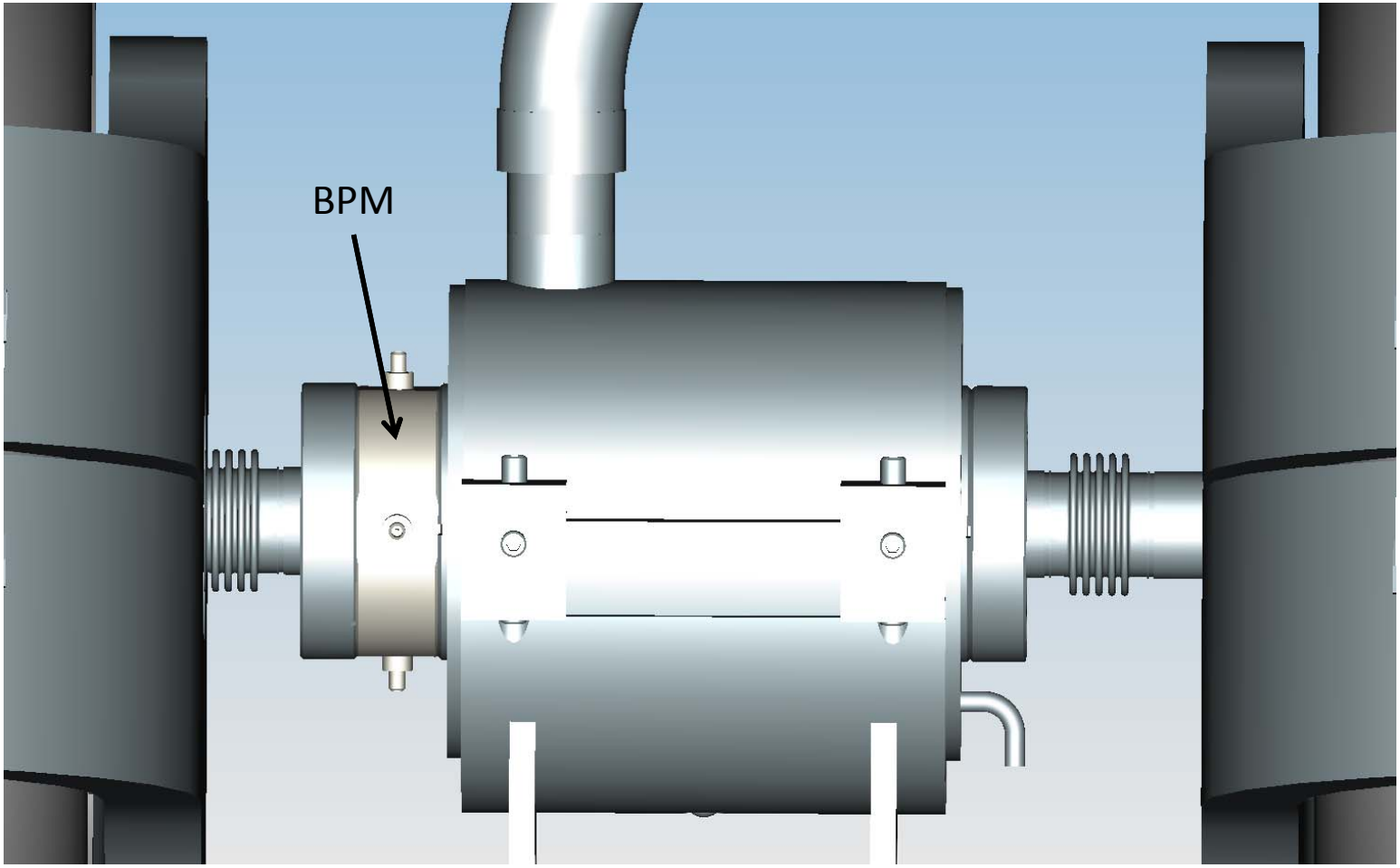

SSR1 Cryomodule Focusing Solenoid

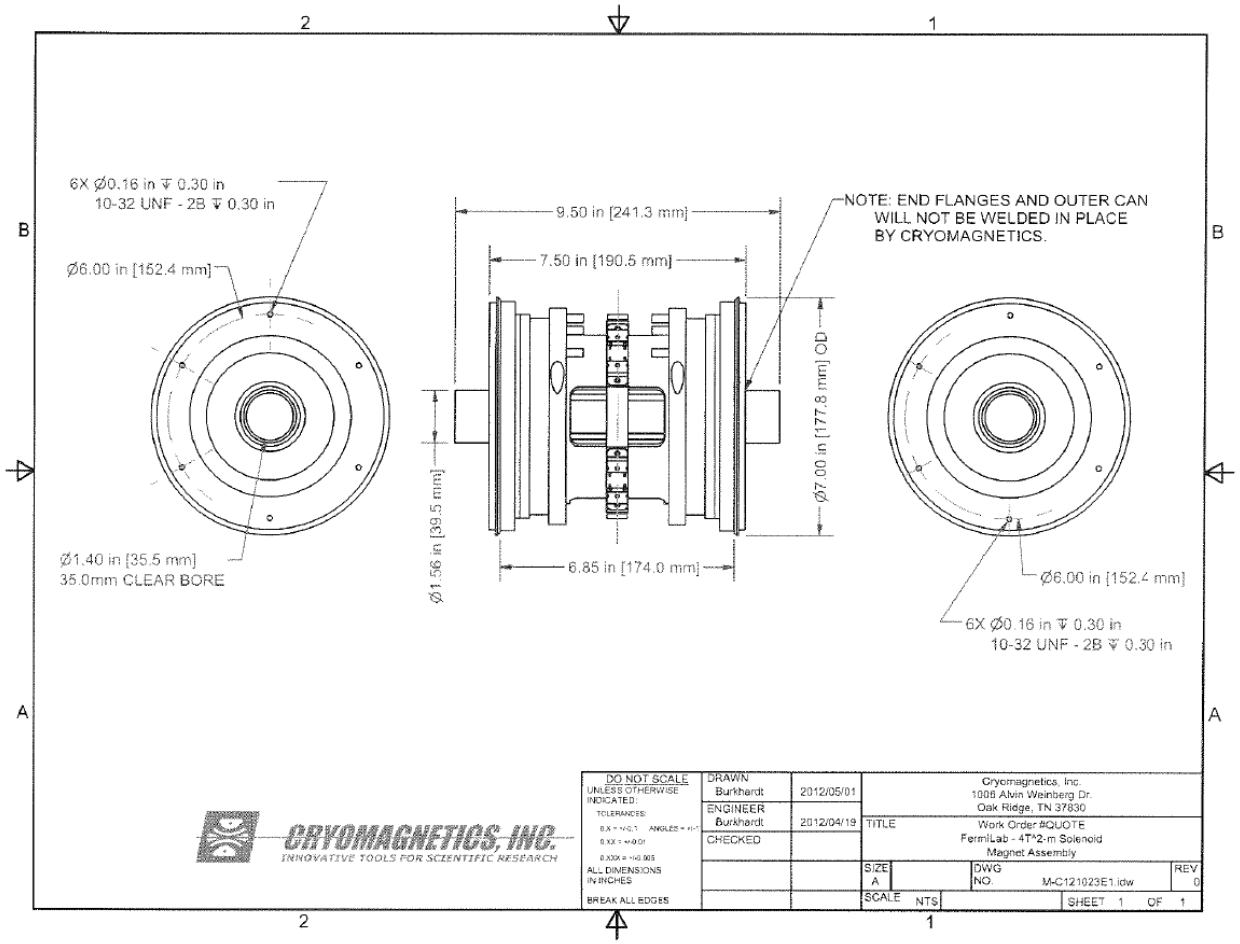

SSR1 Cryomodule Room Temperature Strongback and Support Posts

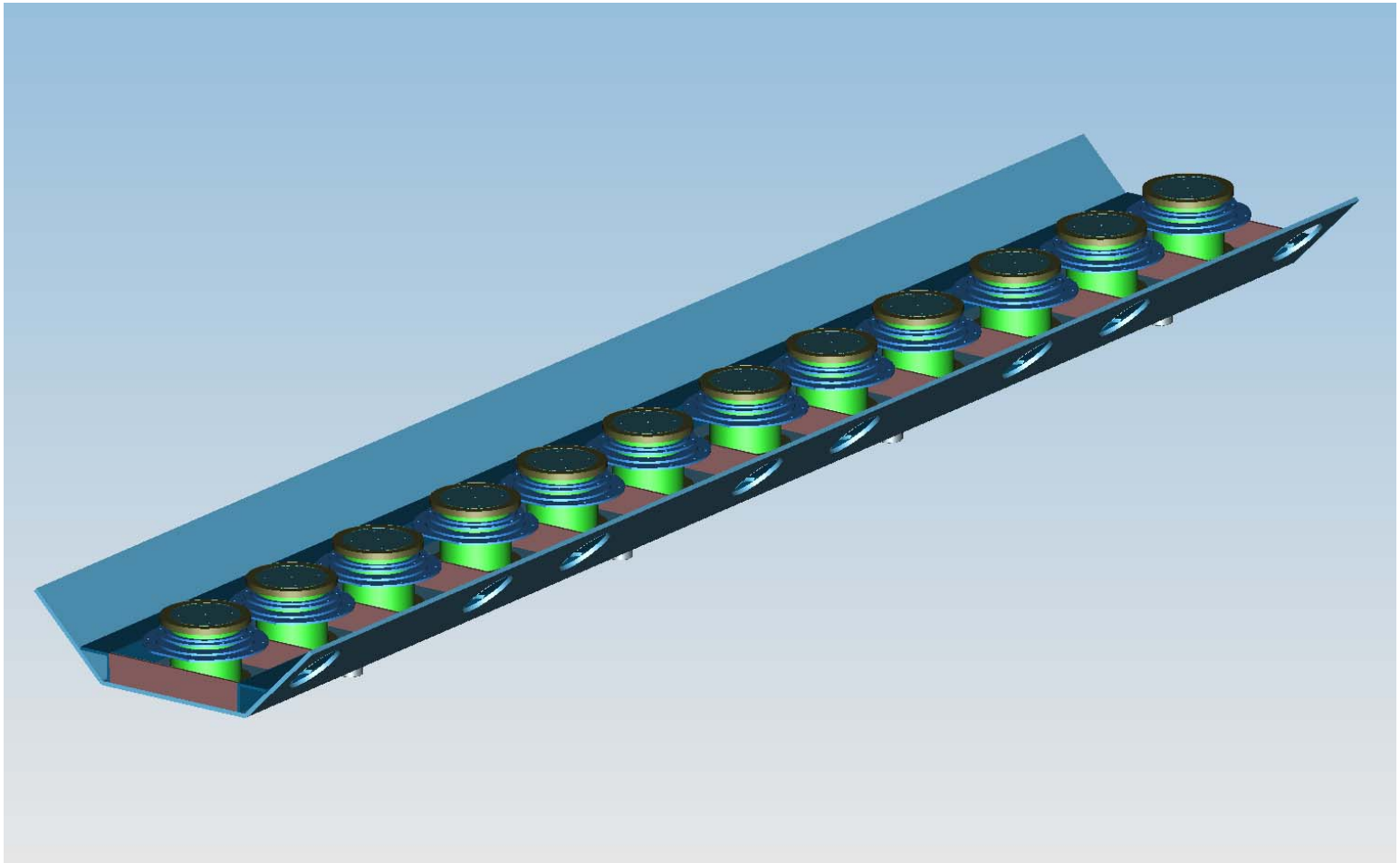

SSR1 Cryomodule Input Coupler

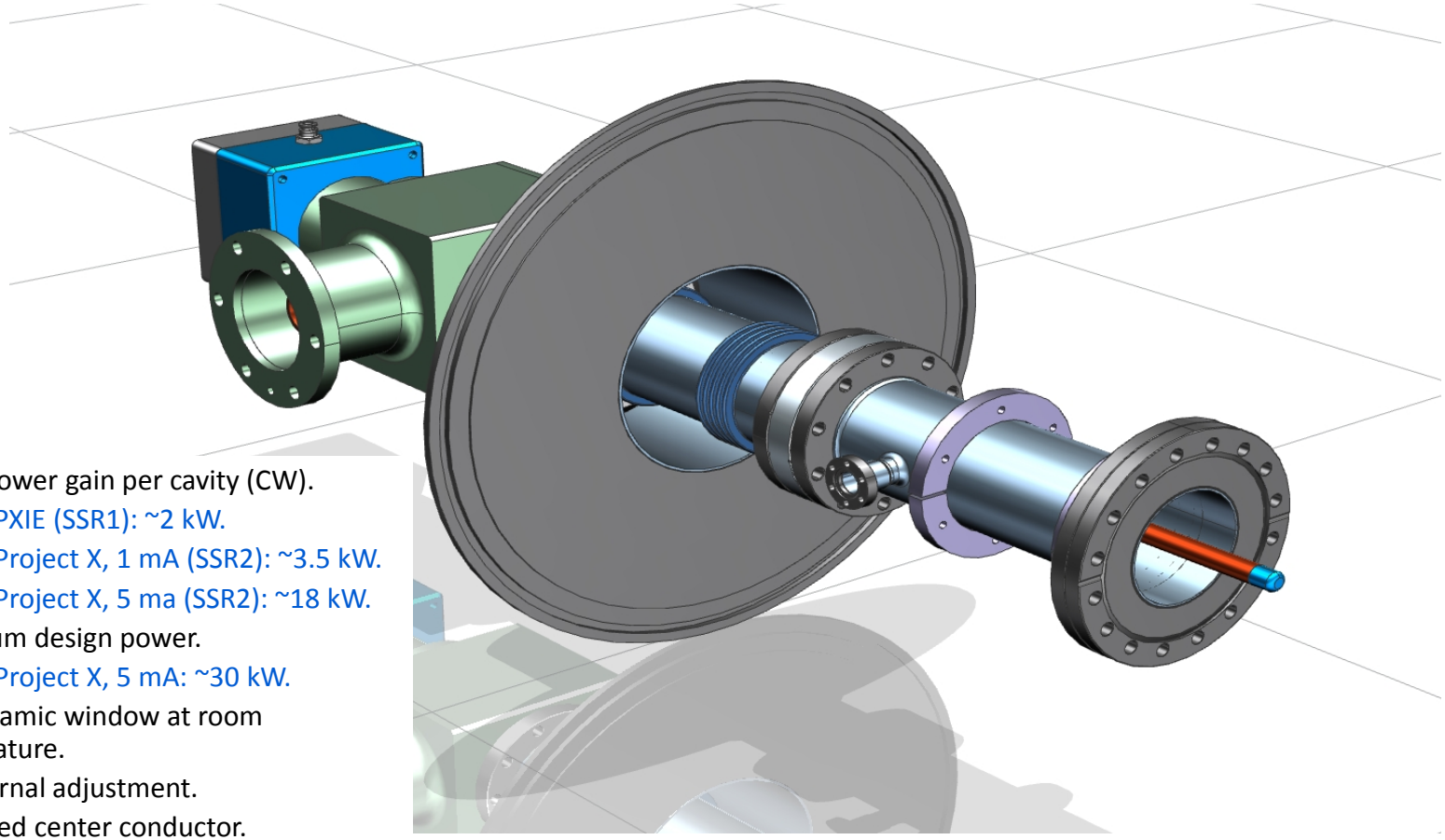

- Beam power gain per cavity (CW).
  - PXIE (SSR1): ~2 kW.
  - Project X, 1 mA (SSR2): ~3.5 kW.
  - Project X, 5 ma (SSR2): ~18 kW.
- Maximum design power.
  - Project X, 5 mA: ~30 kW.
- One ceramic window at room temperature.
- No external adjustment.
- Air cooled center conductor.

Current Lead Assembly

2 – 100 A leads
8 – 50 A leads
1 – Protection lead
11 total

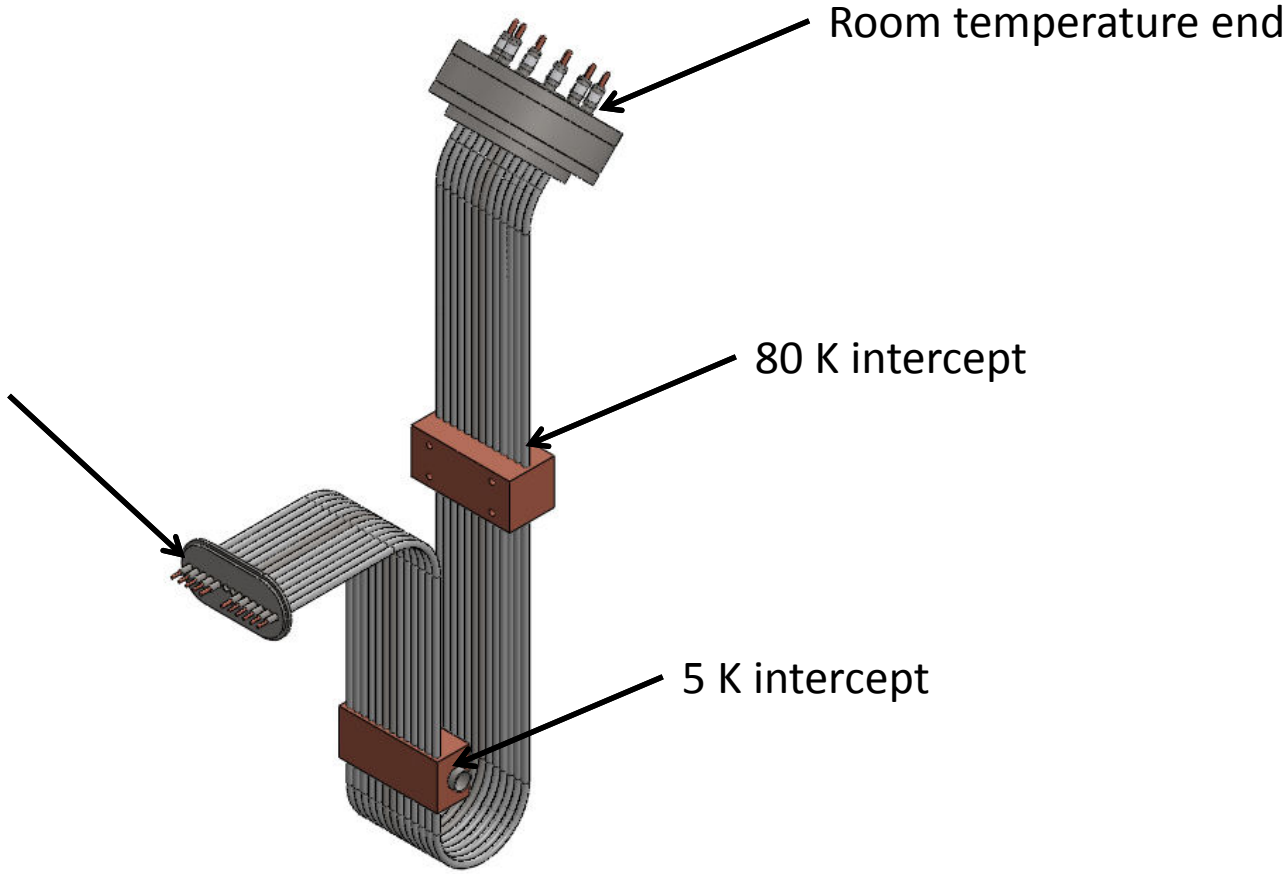

SSR1 Cryomodule Heat Load Estimates

SSR1 Cryomodule Heat Load Estimates							
SSR1	Each unit (W)			Mult	Total (W)		
8 cavities, 4 solenoids	80 K	4.5 K	2 K		70 K	4.5 K	2 K
Input coupler static	5.36	2.82	0.50	8	42.88	22.56	4.00
Input coupler dynamic	0.00	0.00	0.25	0	0.00	0.00	0.00
Cavity dynamic load	0.00	0.00	1.78	0	0.00	0.00	0.00
Support post	2.76	0.36	0.05	12	33.12	4.32	0.60
Conduction lead assembly	21.40	10.90	1.48	4	85.60	43.60	5.92
MLI (total 70 K + 2 K)	30.54	0.00	1.42	1	30.54	0.00	1.42
Cold to warm transition	0.72	0.08	0.01	2	1.44	0.16	0.02
Total					**193.6**	**70.6**	**12.0**

Notes:

1. Cavity dynamic loads from Nikolai Solyak, February 2012.
2. Input coupler static loads from S. Kazakov, February 2012, no copper plating on outer conductor, intercepts at 15 K and 125 K.
3. Current lead heat loads assume 4 steering coils and one protection lead at 50 A, 1 solenoid coil at 200 A.
4. Current lead heat loads assume the 70 K intercept is at 100 K, the 5 K intercept is at 10 K.

Status of Activities

- Conceptual cryomodule design review completed in February 2013.
- Component reviews for the coupler, tuner, and dressed cavity completed separately.
- First 10 cavities are complete. VTS tests completed on 9. Repair of 10th cavity in process.
- First dressed cavity is complete and awaiting testing in STC.
- Drawings are released for the support posts and strongback. Bid requests to follow.
- Drawings are nearly complete for the vacuum vessel. Bid requests to follow.
- Conceptual design of the current leads is complete. We plan to assemble and test one pair of 100 A leads early next year.
- The first production solenoid is in-house and awaiting quench performance testing in IB1. The helium vessel drawings have been released. Magnet vendor is on hold until successful quench performance measurements at 2 K are complete.
- Tuner is still at conceptual design state. Detailed design to start early next year.
- Input coupler parts and sub-assemblies are nearly complete for three assemblies. We're having trouble with assemblies involving copper bellows and are working to resolve those issues.
- STC upgrade to 2 K operation nearly complete. Expect first cooldown early January.

Schedule Milestones

Layout: PXIE SSR1 Milestones

Filter All: Milestone, PXIE Schedule, PXIE SSR1, Management Milestones
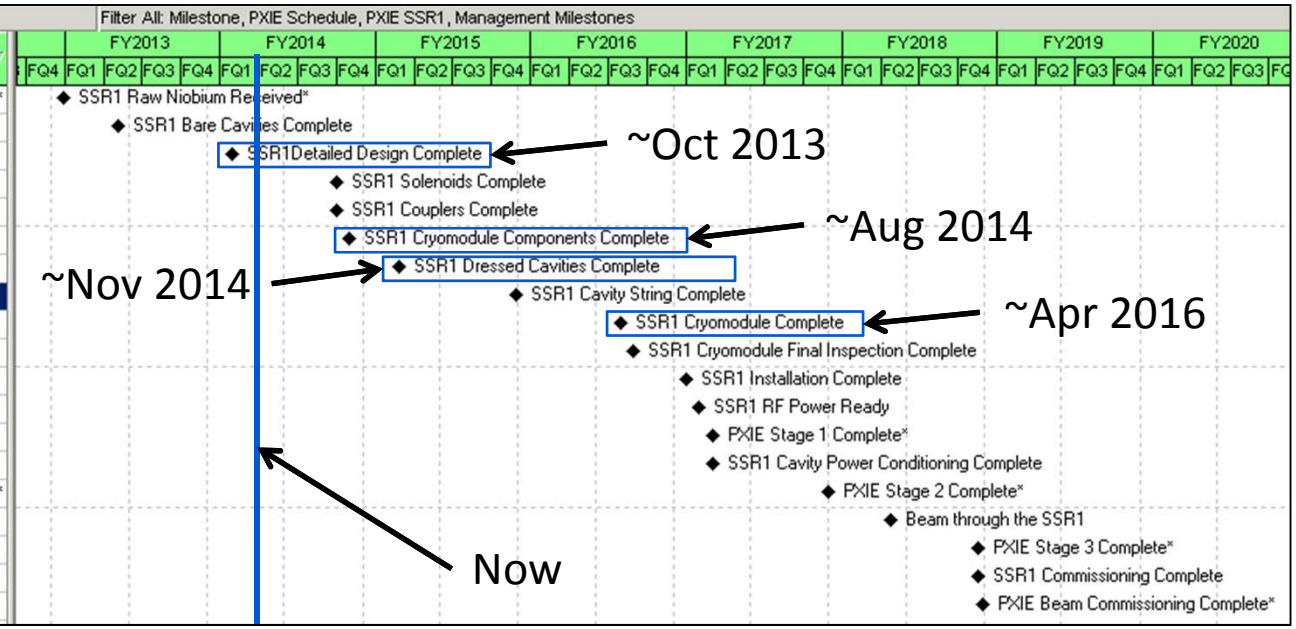
Activity Name	Finish
SSR1 Raw Niobium Received*	28-Sep-12*
SSR1 Bare Cavities Complete	04-Feb-13
SSR1Detailed Design Complete	29-Oct-13
SSR1 Solenoids Complete	01-Jul-14
SSR1 Couplers Complete	02-Jul-14
SSR1 Cryomodule Components Complete	01-Aug-14
SSR1 Dressed Cavities Complete	24-Nov-14
SSR1 Cavity String Complete	26-Aug-15
SSR1 Cryomodule Complete	28-Apr-16
SSR1 Cryomodule Final Inspection Complete	27-May-16
SSR1 Installation Complete	29-Sep-16
SSR1 RF Power Ready	28-Oct-16
PXIE Stage 1 Complete*	30-Nov-16
SSR1 Cavity Power Conditioning Complete	30-Nov-16
PXIE Stage 2 Complete*	30-Aug-17*
Beam through the SSR1	22-Jan-18
PXIE Stage 3 Complete*	17-Aug-18
SSR1 Commissioning Complete	17-Aug-18
PXIE Beam Commissioning Complete*	29-Aug-18