Managed by Fermi Research Alliance, LLC for the U.S. Department of Energy Office of Science

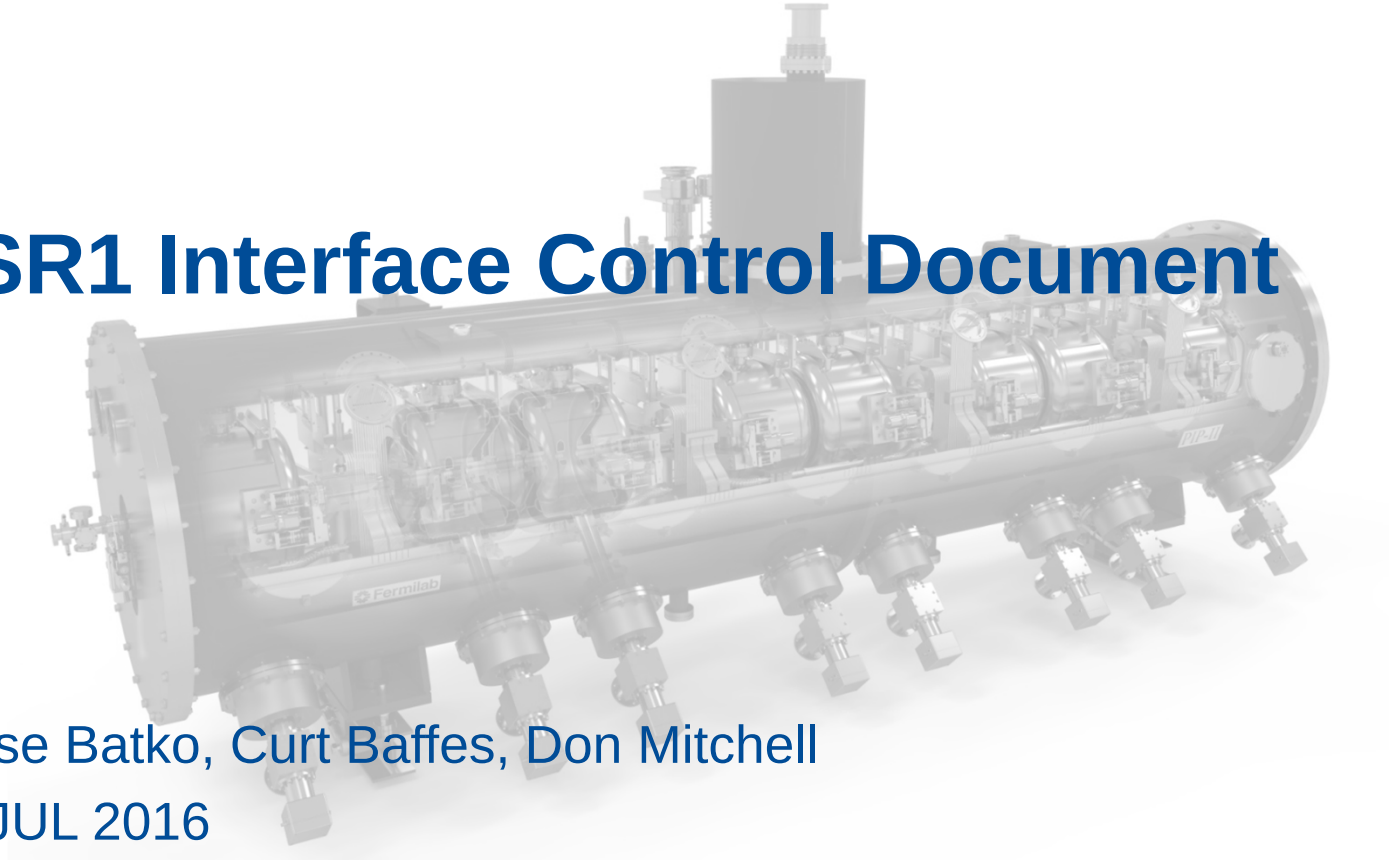

SSR1 Interface Control Document

Jesse Batko, Curt Baffes, Don Mitchell

26 JUL 2016

SSR1 Interface Control Document – TC Doc #ED0004129

- ED0004129- INTERFACES FOR THE PIP-II SSR1 CRYOMODULE
  - ED0004129
  - ED0004129--.001;1- INTERFACES FOR THE PIP-II SSR1 CRYOMODULE
  - ED0004129--;1- INTERFACES FOR THE PIP-II SSR1 CRYOMODULE
    - ED0004129--
    - Alternate IDs
    - ED0004129---ICD.docx(MSWordX)
    - ED0004129---eBOM
    - ED0004129--pinout table(MSExcelX)
    - Rejected
    - eBOM
  - ED0004129-eBOM

Check-out lock

In a workflow

Orange flag: Modify Target

Overview | Related Datasets | Available Revisions | Signoffs

Item Properties

Description:	This is the Interface Control Document for the PIP-II SSR1 Cryomodule.
Item:	ED0004129- INTERFACES FOR THE PIP-II SSR1 CRYOMODULE
Owner:	Mitchell, Don (dmitchel)
Group ID:	Mechanical
Last Modifying User:	Baffes, Curtis (cbaffes)
Checked-Out:	Y
Checked-Out By:	Baffes, Curtis (cbaffes)

More Properties...

SSR1 ICD – Routing for signatures

Fermila

Fer
INTERFA

Prepared by:	D. Mitchell J. Batko C. Baffes
Reviewed by:	M. Ball
Reviewed by:	V. Bocean
Reviewed by:	B. Chase
Reviewed by:	A. Chen
Reviewed by:	J. Czajkowski
Reviewed by:	S. Dixon
Reviewed by:	B. Hanna
Reviewed by:	J. Holzbauer
Reviewed by:	J. Leibfritz
Reviewed by:	A. Klebaner
Reviewed by:	R. Pasquinelli
Reviewed by:	J. Patrick
Reviewed by:	D. Peterson
Reviewed by:	P. Prieto
Reviewed by:	V. Scarpine
Reviewed by:	J. Steimel
Reviewed by:	M. White

Perform Signoff

Process: ED0004129--;1- INTERFACES FOR THE PIP-II SSR1 CRYOMODULE State: Failed

Process Description:

Review Task: Checkers Review

Quorum: 100% Wait For Undecided Reviewers: true

Responsible Party: Mitchell, Don (dmitchel) Instructions

For Review: Attachments All Comments

User-Group/Role	Decision	Comments	Date
Mitchell, Don (dmitchel)-Mechanical/E...	Reject	Delegated sign-off for Vic Scarpine, rejected but will g...	27-Jun-2016 15:14
Passarelli, Donato (donato)-Mechanica...	Reject	I have the extimated values (X, Y) of 300K-->2K shift o...	27-Jun-2016 9:52
Pischalnikov, Yuriy M (pischaln)-Mecha...	Reject	requested changes on table 9.3	17-Jun-2016 13:57
Orlov, Yuriy M (orlov)-Mechanical/Engi...	Approve		17-Jun-2016 8:20
Baffes, Curtis (cbaffes)-Mechanical/En...	Reject	Rejecting to complete workflow step and return docu...	30-Jun-2016 16:27
Khabiboulline, Timergali (khabibul)-M...	Approve	1. Cavity field probe signal called "Cavity Pickup" in ta...	15-Jun-2016 17:20
Batko, Jesse S. (jbatko)-Mechanical/En...	Reject	6/30/16	30-Jun-2016 15:43
Chen, Meiyu (mychen1)-Mechanical/En...	Reject	Page 5, Figure 1.1, it should be Magnet current lead po...	17-Jun-2016 10:37
Wang, Renzhuo (rwang)-Mechanical/E...	Reject	no cryogenic control interface is defined.	24-Jun-2016 13:37
Steimel, James M (steimel)-Mechanical...	Approve	I would like to see a concise fluids summary table. Ne...	16-Jun-2016 17:02
Prieto, Peter S (prieto)-Mechanical/En...	Approve		15-Jun-2016 18:05
Peterson, David W (peterson)-Mechani...	Reject	Page 8: Solenoid voltage of 24 VDC may be more suit...	17-Jun-2016 10:21
Patrick, James F (patrick)-Mechanical/S...	Reject	Comments from Mike Kucera regarding the cavity tune...	28-Jun-2016 10:45
Pasquinelli, Ralph (pasquin)-Mechanic...	Approve	looked closely at RF sections and I approve	16-Jun-2016 11:04
Klebaner, Arkadiy L (klebaner)-Mechan...	Approve		16-Jun-2016 7:48
Leibfritz, Jerry R (leibfritz)-Mechanical/...	Approve		15-Jun-2016 15:18
Holzbauer, Jeremiah P (jeremiah)-Mec...	Approve		15-Jun-2016 14:33
Hanna, Bruce M (bhanna)-Mechanical/...	Reject	There have been changes to the PS system;Solenoid m...	23-Jun-2016 14:39
Dixon, Steven (steveo)-Mechanical/En...	Approve		16-Jun-2016 7:20
Czajkowski, Jerzy (jerzy)-Mechanical/E...	Approve		16-Jun-2016 13:31
Chen, Alex Zuxing (alexchen)-Mechani...	Approve		10-Jun-2016 14:37
Chase, Brian E (chase)-Mechanical/Eng...	Reject	The cavity probe signal on the flange is spelled out as ...	16-Jun-2016 16:21
Bocean, Virgil (bocean)-Mechanical/En...	Reject	New proposed locations for SSR1 approximate extern...	16-Jun-2016 11:30
Ball, Maurice (reese)-Mechanical/Engi...	Approve		25-Jun-2016 11:54

Close

status:
Targets

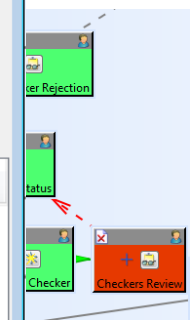

	Extension 4645	Date See Teamcenter for approval records
	Extension 2634	
	Extension 4693	
	Extension 3441	
	Extension 6328	
	Extension 3972	
	Extension 8212	
	Extension 4401	Date See Teamcenter for approval records
	Extension 2558	
	Extension 6768	
	Extension 4094	
	Extension 3988	

Fermilab

SSR1 ICD Table of Contents

Table of Contents

1.0 Purpose-SSR1 Cryomodule 5
2.0 Beam Line Connections 6
3.0 Alignment and Stand Interface 8
4.0 Handling, Transportation, Structural Interface to Facility 10
5.0 Facility Utilities 11
6.0 Magnet Leads - Current Lead Port (CLP) 13
8.0 Coupler Port (CP) & RF Connections 17
9.0 Tuners and Tuner Access Ports (TAP) 20
10.0 Beam Position Monitors 27
11.0 Cryogenic Connections 28
12.0 Cryomodule Vacuum Systems 32
13.0 Interlocks 35
14.0 Microphonics 37
References 39
Appendix 40

A note to reviewers and approvers of Rev-

As of the revision date of this document, not enough design information is known about SSR1 and its interfacing systems to write a complete, comprehensive interface control document. As such, this revision documents what we know today, and highlights areas of uncertainty or where more design is required. The expectation is that this document will be revised when the design has progressed far enough that all interfaces may be completely specified.

SSR1 External Features

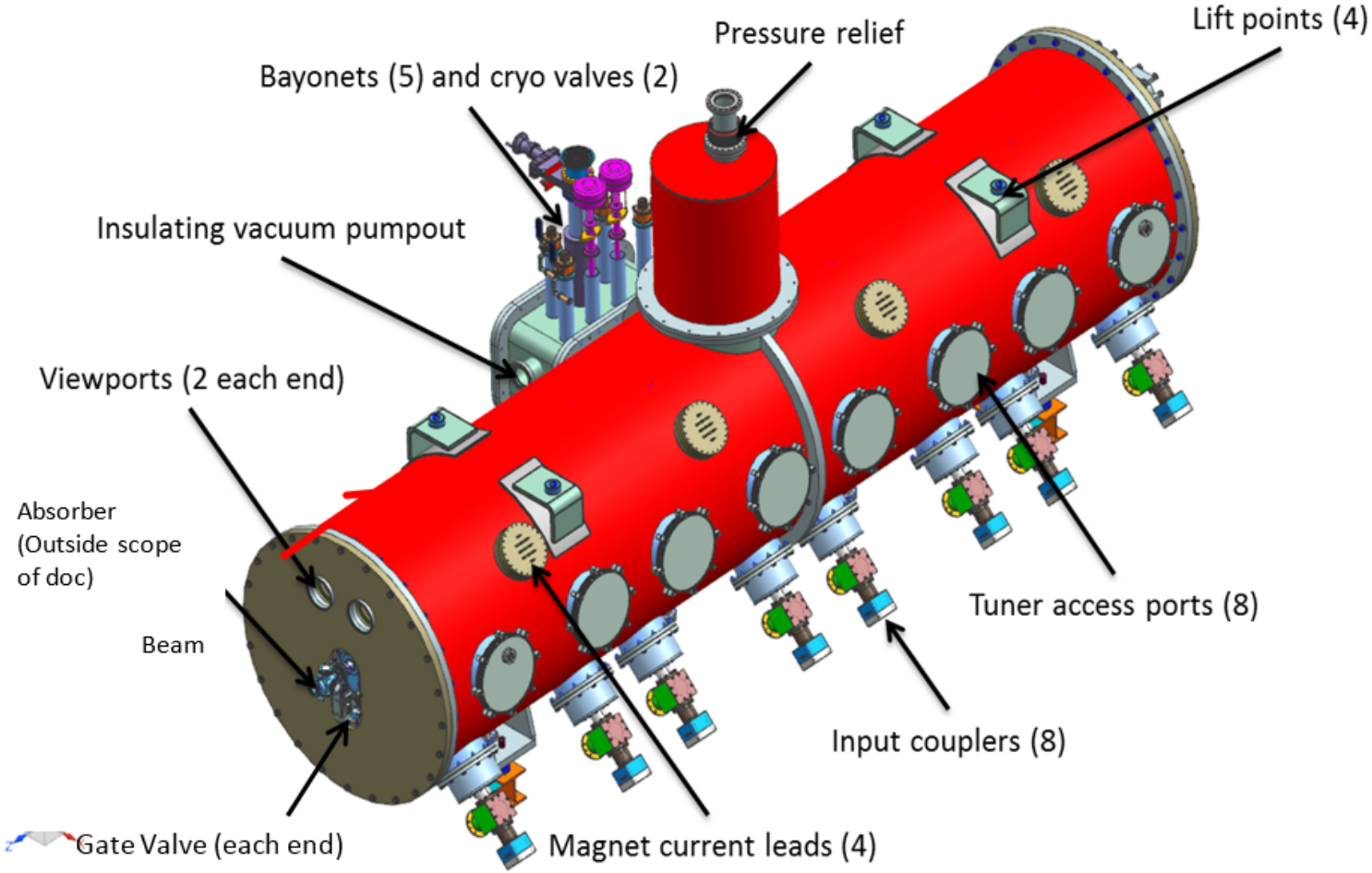

Beam Line Connections

Electrical connections

Solenoid valve

Type	3/2-way
Voltage	Defined by order

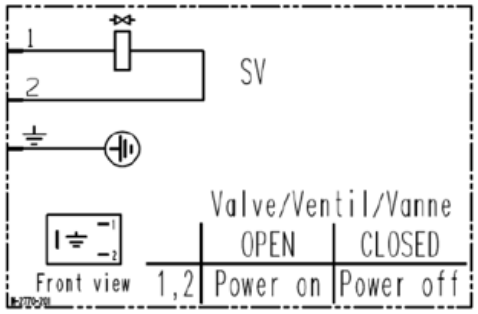

Wiring diagram

Position indicator

Type	Micro switch	
Voltage	≤ 250 V AC	≤ 50 V DC
Current max.	5.0 A	3 A

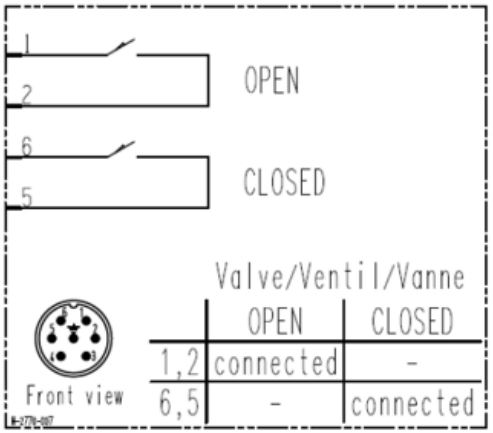

Wiring diagram

Figure 2.2: Electrical connections and wiring diagram for Gate Valve

Alignment and Stand Interface

The predicted 300K → 2K shift of cavity string relative to cryostat vessel in the alignment group CSYS is

X: -0.1 mm (+X is from the beamline towards the coupler side of the cryomodule)

Z: -1.2 mm (+Z is from the beamline vertically upwards)

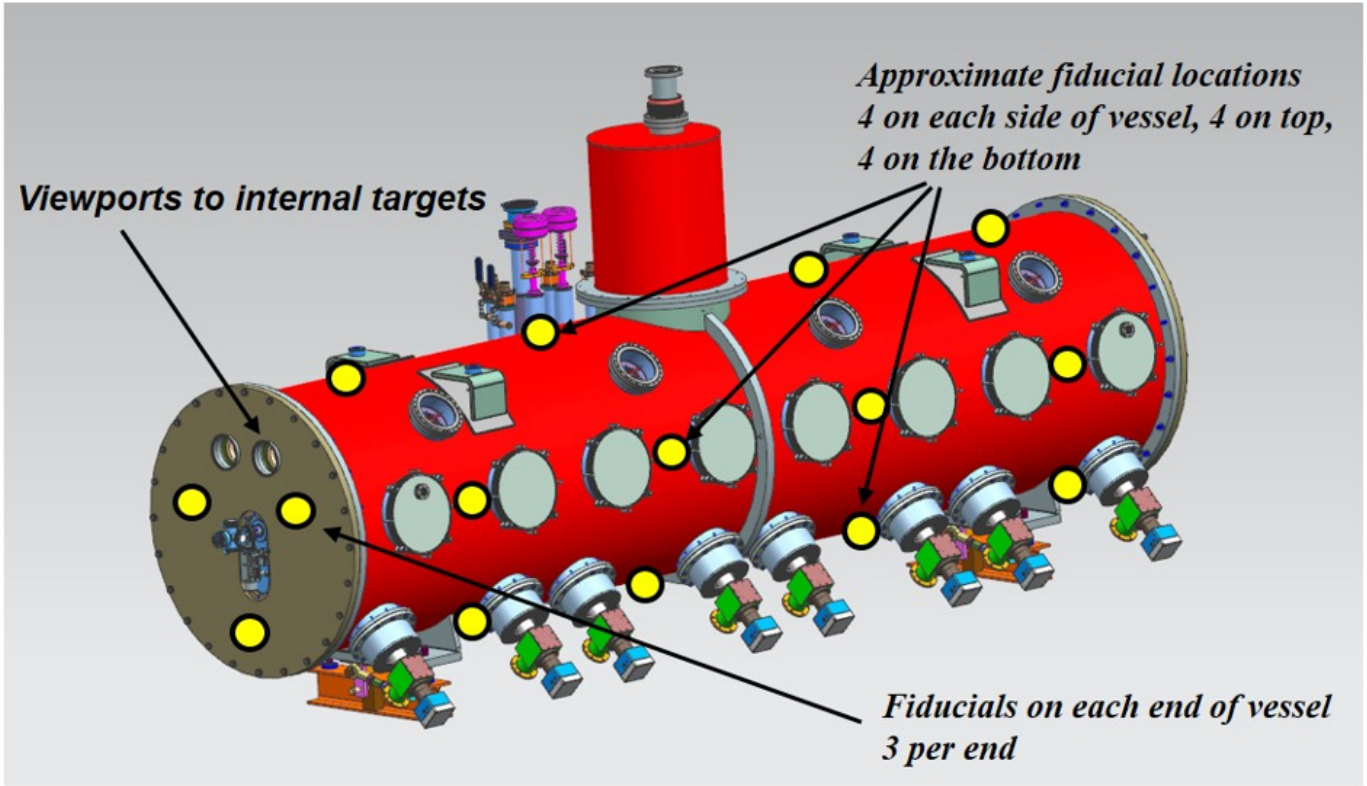

Figure 3.1: Approximate external fiducial locations. All will be tack welded to the vacuum vessel.

Handling, Transportation, Structural Interface to Facility

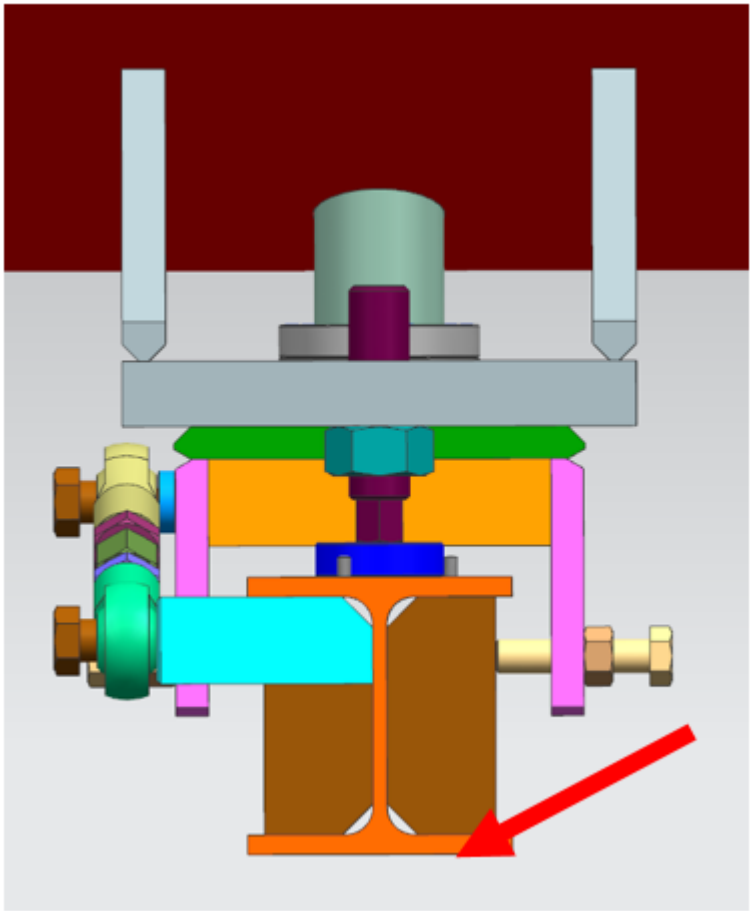

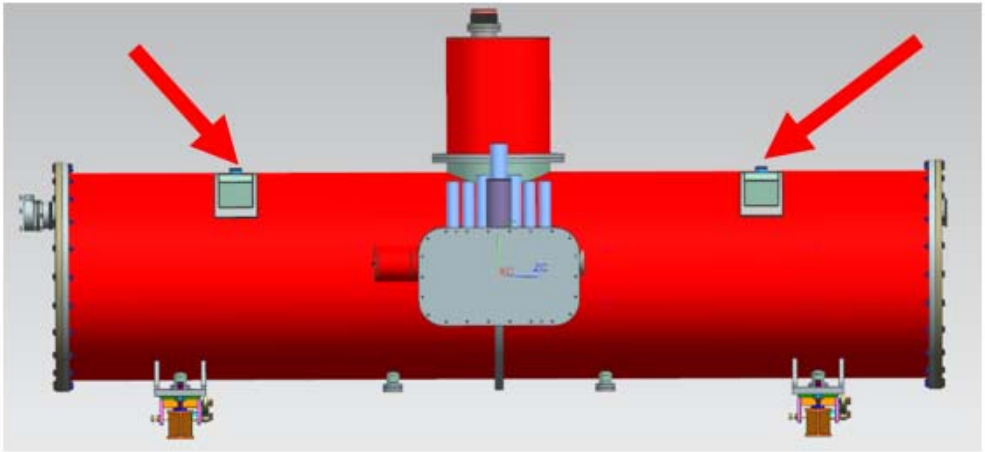

Figure 4.2: hard points for hoisting interface

Facility Utilities

The SSR1 requires a source of clean, dry nitrogen for cryostat backfill. The AD/Fluids team shall provide nitrogen in the PIP-II Injector Test cave for this purpose. (Note: this nitrogen is NOT used for beamline vacuum backfill).

The SSR1 requires compressed air for valve operation (intermittent use). The AD/Fluids group shall provide this air, with the following parameters:

- Qty 5 valves o
- "Instrument q
- System MAWF
- System supply
- Fitting on SSR1

The SSR1 also requires compressed air for the coupler window and DC block (continuous use). The AD/Fluids group shall provide this air, with the following parameters:

- Coupler window
  - Conditioned air
    - Particles ≥ 5µm filtered
    - Moisture removed, dew point ≤ -10°C
    - Oil removed
  - System MAWP 50psig
  - System supply pressure at interface to SSR1 regulated
    - Adjustabl
    - One regu
  - Flow rate ≤4SCFM
  - Instrumentation total). SSR1 tear provide flow mea
  - Inlet Fitting on SS
  - Outlet Fitting on
- DC Block
  - Conditioned air
    - Particles ≥ 5µm filtered
    - Moisture removed, dew point ≤ 5°C
    - Oil removed
  - System MAWP 50psig
  - System supply pressure at interface to SSR1 regulated
    - Adjustable 15-50psig, nominal 30psig
    - One regulator for all 8 window connection
  - Flow rate ≤4SCFM per coupler, 32SCFM total
  - Instrumentation of return air flow from each coupler required (8 return flow measurements total). SSR1 team to provide plumbing of outlet air to a single location. AD/Fluids team to provide flow measurement.
  - Fitting on SSR1: INSERT
  - Outlet Fitting on SSR1: INSERT

Magnet Leads – Current Lead Port (CLP)

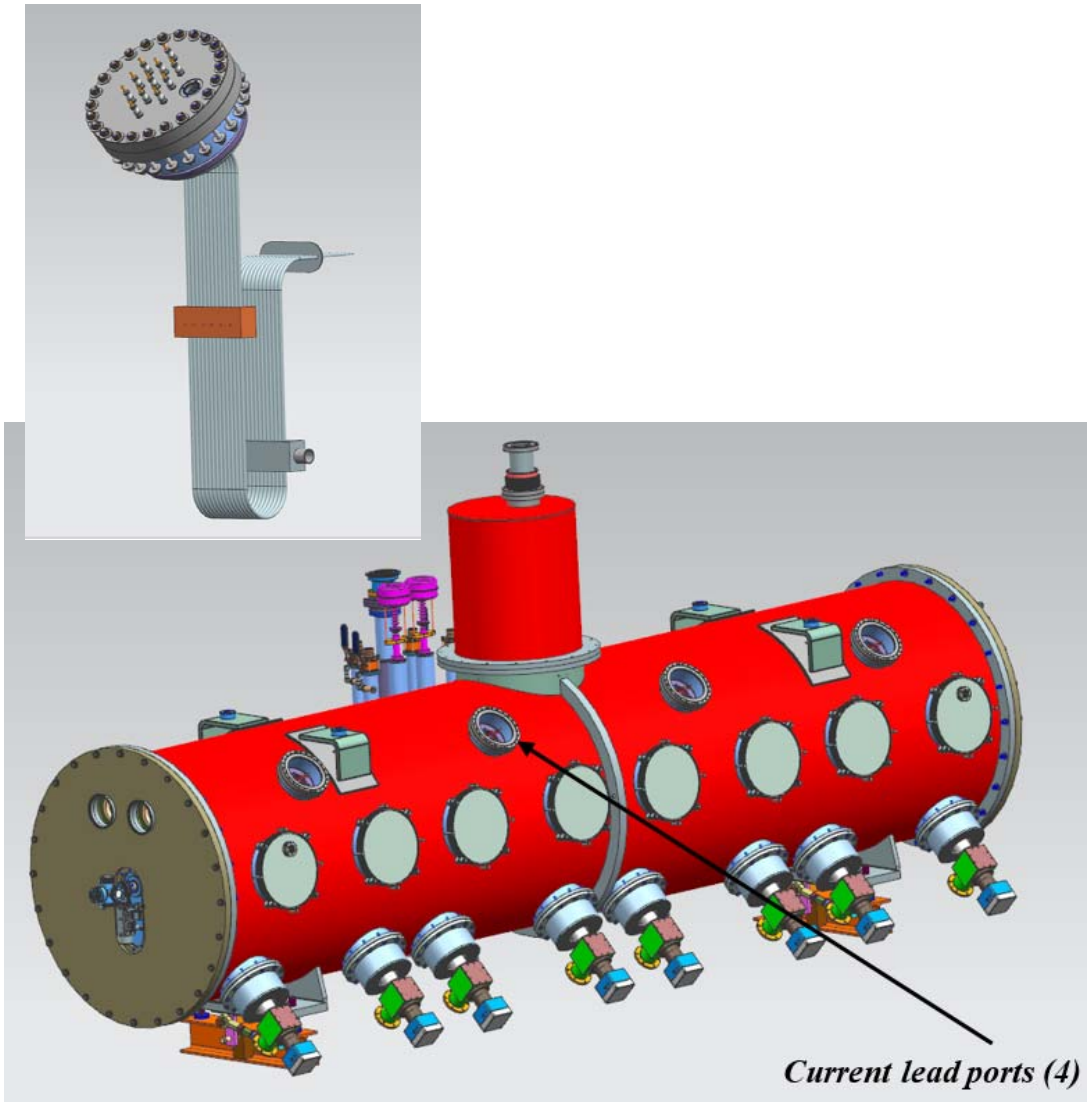

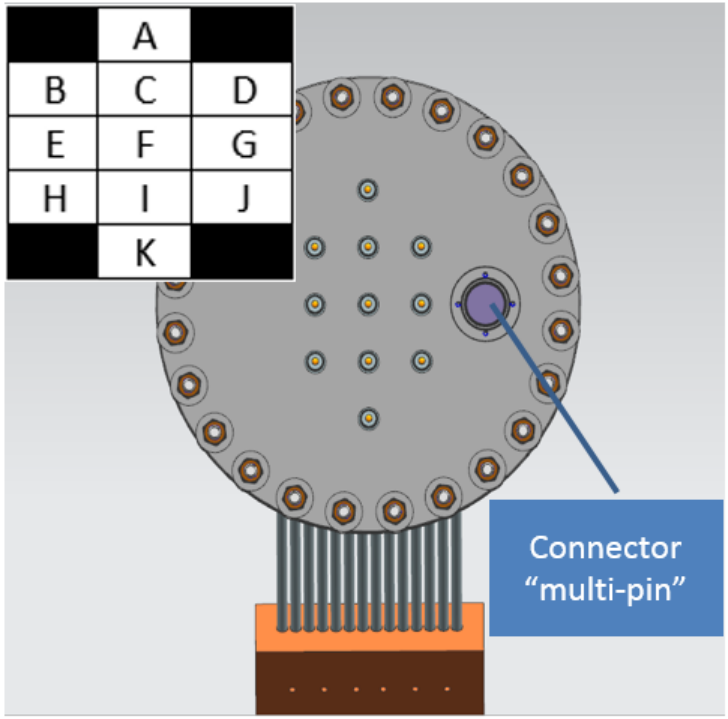

Magnet Leads – Current Lead Port (CLP)

		Pinout at interface flange			
Function	Current	Interface Connector Make / Model	Signal	Connector ID	Pin
Solenoid Power	100A	CeramTec 21032-01-W	I+	A	A
		CeramTec 21032-01-W	I-	K	A
X Corrector Coil 1 Power	50A	CeramTec 21032-01-W	I+	TBD	A
		CeramTec 21032-01-W	I-	TBD	A
X Corrector Coil 2 Power	50A	CeramTec 21032-01-W	I+	TBD	A
		CeramTec 21032-01-W	I-	TBD	A
Y Corrector Coil 1 Power	50A	CeramTec 21032-01-W	I+	TBD	A
		CeramTec 21032-01-W	I-	TBD	A
Y Corrector Coil 2 Power	50A	CeramTec 21032-01-W	I+	TBD	A
		CeramTec 21032-01-W	I-	TBD	A
Ground	0A	CeramTec 21032-01-W	ground	TBD	A
Solenoid Voltage Tap	0A	Deltoronics DT02H-14-19PN	V+	Multi-pin	TBD
			V-		TBD
X Corrector Coil 1 Voltage Tap	0A		V+		TBD
			V-		TBD
X Corrector Coil 2 Voltage Tap	0A		V+		TBD
			V-		TBD
Y Corrector Coil 1 Voltage Tap	0A		V+		TBD
			V-		TBD
Y Corrector Coil 2 Voltage Tap	0A		V+		TBD
			V-		TBD

Magnet Power Supply

Parameter	Solenoid coil	Corrector single coil
SSR1 Coil inductance	3.28 H	~.10 H
Type of source	Bipolar	Bipolar
Power supply max operating current	70 A	50 A
DC Bulk Voltage	22V	22V
# of SSR1 Supplies	4	16
Maximum speed of current ramp	1.5 A/sec	25 A/sec
Cable Type	#4	#4
Cable Length	400 ft	400 ft
Cable resistance	.1076 ohms	.1076 ohms
Accuracy of current setting	<1%	<1%
Current ripple	<0.1%	<0.1%
Quench current	90 A	>50A

Coupler Port and RF Connections

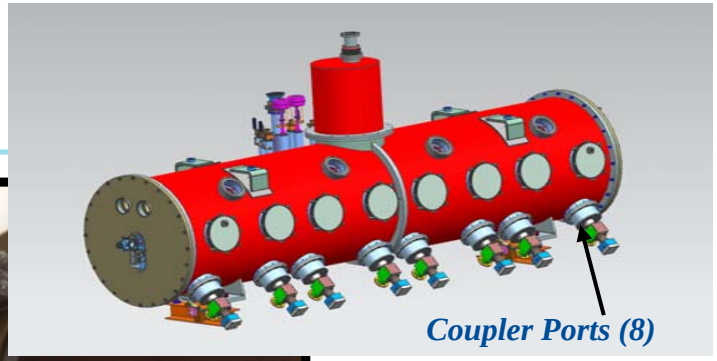

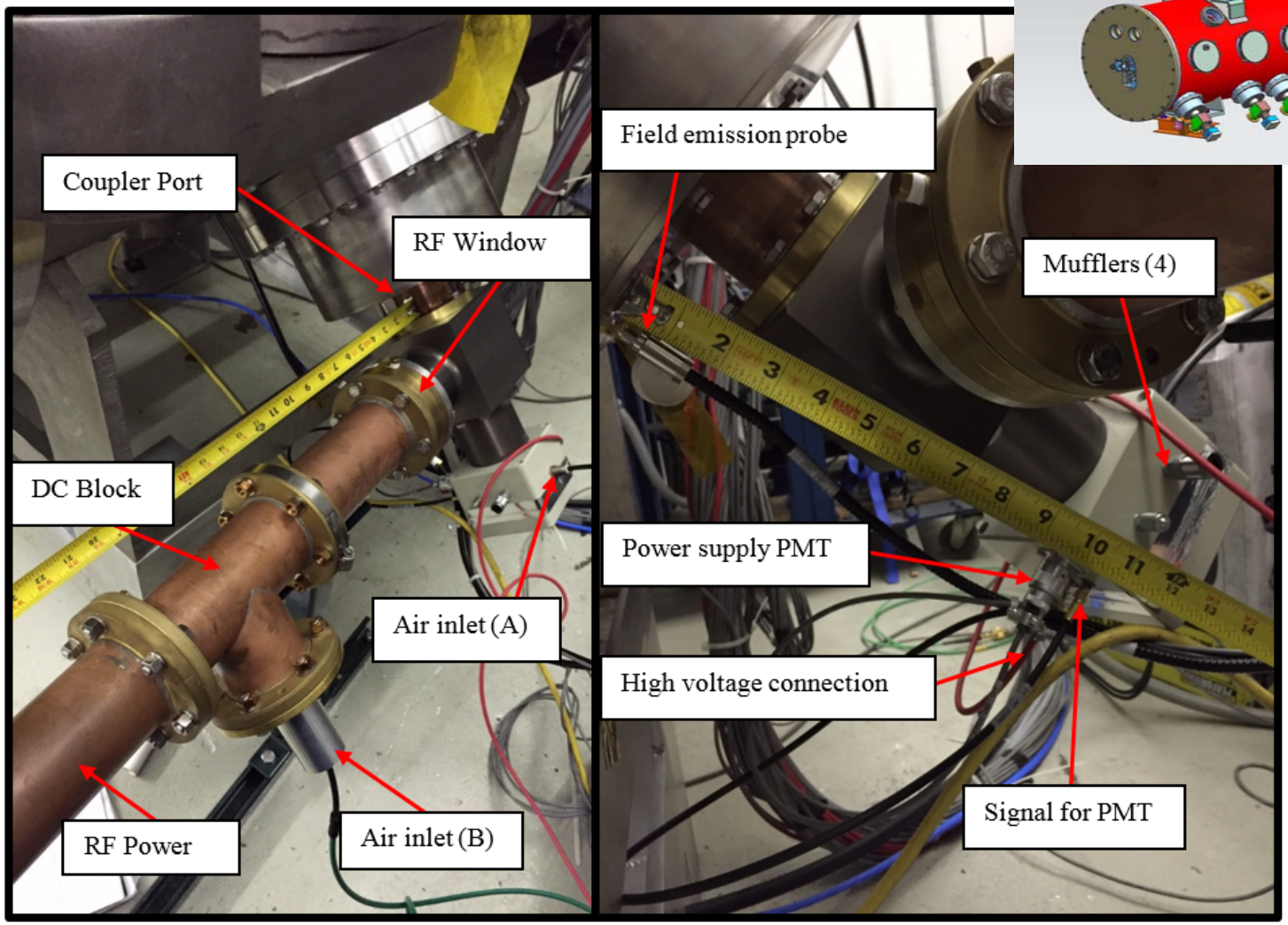

Figure 8.2: First is the front view of coupler port in testing. Second is side view to show connection on back side.

Coupler Port and RF Connections

			Pinout at Interface Flange			
Function	Type	Sensor Make / Model	Interface Connector Make / Model	Signal	Connector ID	Pin
Cavity Pickup	N-pickup		CeramTec 15310-03-W (SMA)	signal	1	inner conductor
				ground		outer conductor
Temp Sensor 1 - low temp	2-wire RTD	LakeShore / CX-1030-SD-HT	Detoronics / DT02H-14-19PN	V+	2	TBD
				V-		TBD
Temp Sensor 2 - low temp	2-wire RTD	LakeShore / CX-1030-SD-HT		V+		TBD
				V-		TBD
Temp Sensor 3 - high temp	4-wire RTD	LakeShore / PT-102	Detoronics / DT02H-14-19PN	V+	3	TBD
				V-		TBD
				I+		TBD
				I-		TBD
Temp Sensor 4 - high temp	4-wire RTD	LakeShore / PT-102		V+		TBD
				V-		TBD
				I+		TBD
				I-		TBD
Temp Sensor 5 - high temp	4-wire RTD	LakeShore / PT-102		V+		TBD
				V-		TBD
				I+		TBD
				I-		TBD
Temp Sensor 6 - high temp	4-wire RTD	LakeShore / PT-102		V+		TBD
				V-		TBD
				I+		TBD
				I-		TBD
Heater 1	resistance heater, 15W, TBD V		Sealtron / 8673-14B-4PN-SP-M121	V+	4	TBD
				ground		TBD
Heater 2	resistance heater, 15W, TBD V			V+		TBD
				ground		TBD
Field emission probe					5	
Photomultiplier Tube Power					6	
Photomultiplier Tube Signal					7	
HV Bias			SHV 50Ω?	HV	8	inner conductor
				ground		outer conductor

Tuners and Tuner Access Ports

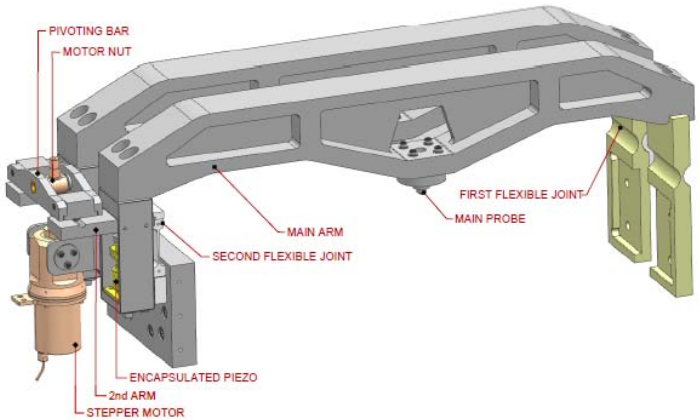

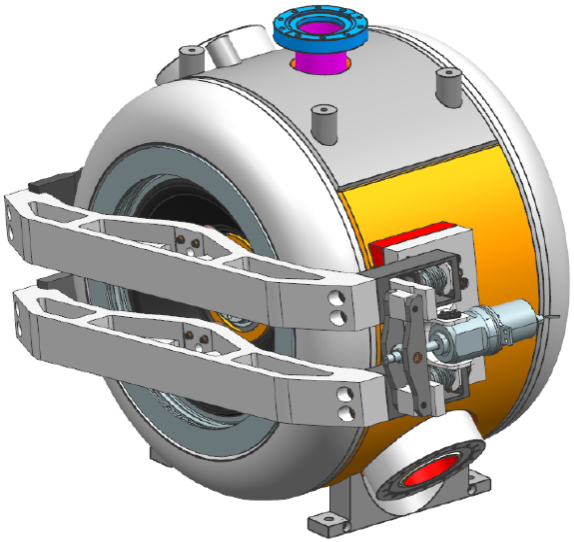

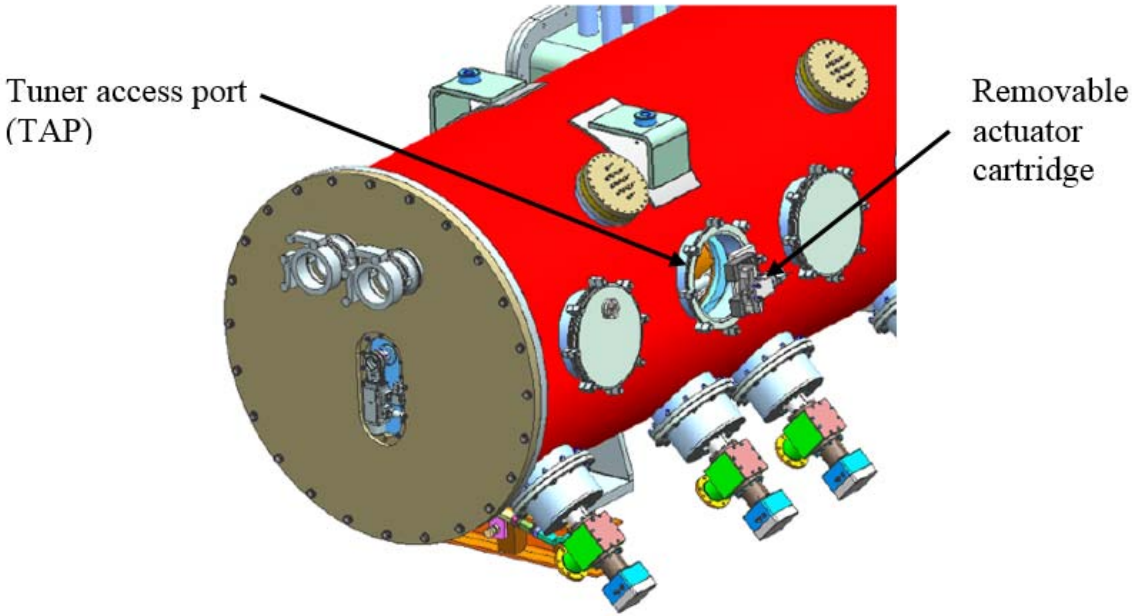

Tuners and Tuner Access Ports

			Pinout at Interface Connector			
Function	Type	Device Make / Model	Interface Connector Make / Model	Signal	Connector ID	Pin
Tuner - Piezo circuit 1			Detoronics / DT02H-16-8PN	V+	TAP_-1	TBD
				V-		TBD
Tuner - Piezo circuit 2				V+		TBD
				V-		TBD
Drive - stepper motor	Bipolar? Current limit?		Detoronics / DT02H-16-8PN	Phase A	TAP_-2	TBD
				Phase A'		TBD
				Phase B		TBD
				Phase B'		TBD
stepper motor inboard	Open or closed at limit?	LakeShore / CX-1030-SD-HT		V+		TBD
				V-		TBD
stepper motor outboard	Open or closed at limit?	LakeShore / CX-1030-SD-HT		V+		TBD
				V-		TBD
Temperature - stepper motor	4-wire RTD	LakeShore / PT-102	Detoronics / DT02H-14-19PN	V+	TAP_-3	TBD
				V-		TBD
				I+		TBD
				I-		TBD
Cavity field probe			Hutton / H+S 34-N-50-0-3/133NE	signal	TAP_-6	inner conductor
				ground		outer conductor
Temperature - cavity vessel	Cernox RTD	LakeShore/ CX-1030-SD-HT	Detoronics / DT02H-14-19PN	V+	TAP_-7	TBD
				V-		TBD
				I+		TBD
				I-		TBD
Temperature - cavity vessel	Cernox RTD	LakeShore/ CX-1030-SD-HT		V+		TBD
				V-		TBD
				I+		TBD
				I-		TBD

Several tables

Beam Position Monitors

The SSR1 includes four cold BPMs. Connections for the BPMs are accommodated on the Tuner Access Ports. The pinout for each BPM is shown in Table 10.1 below. The orientation of buttons shall be defined w.r.t. the PIP-II Injector Test beamline coordinate system as shown in Figure 10.2.

Table 10.1: BPM connection pinouts

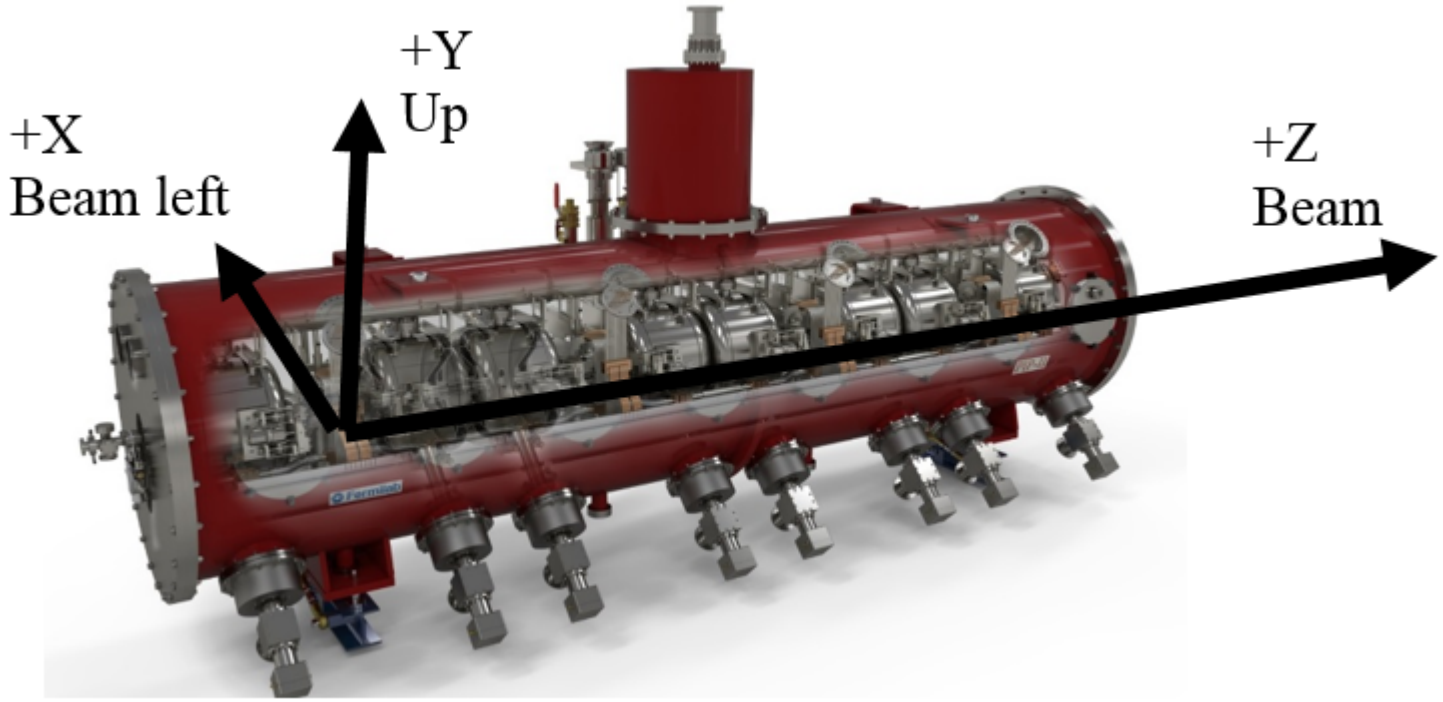

		Hutton / H+S 34-N-50-0-3/133NE	-Y Button	TAP2-TBD TAP4-TBD TAP6-TBD TAP8-TBD	inner conductor

Cryogenic Connections

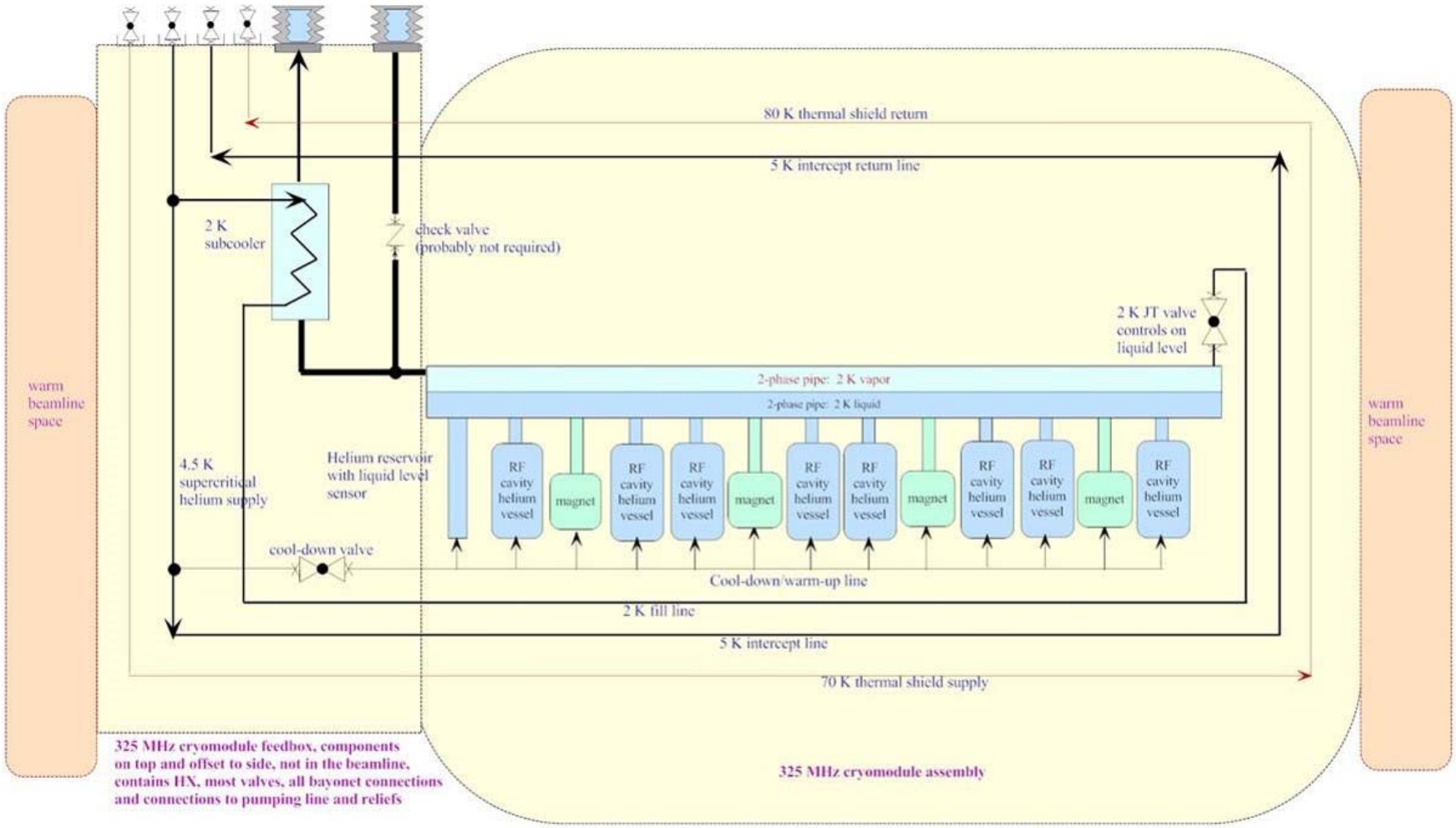

Cryogenic Connections

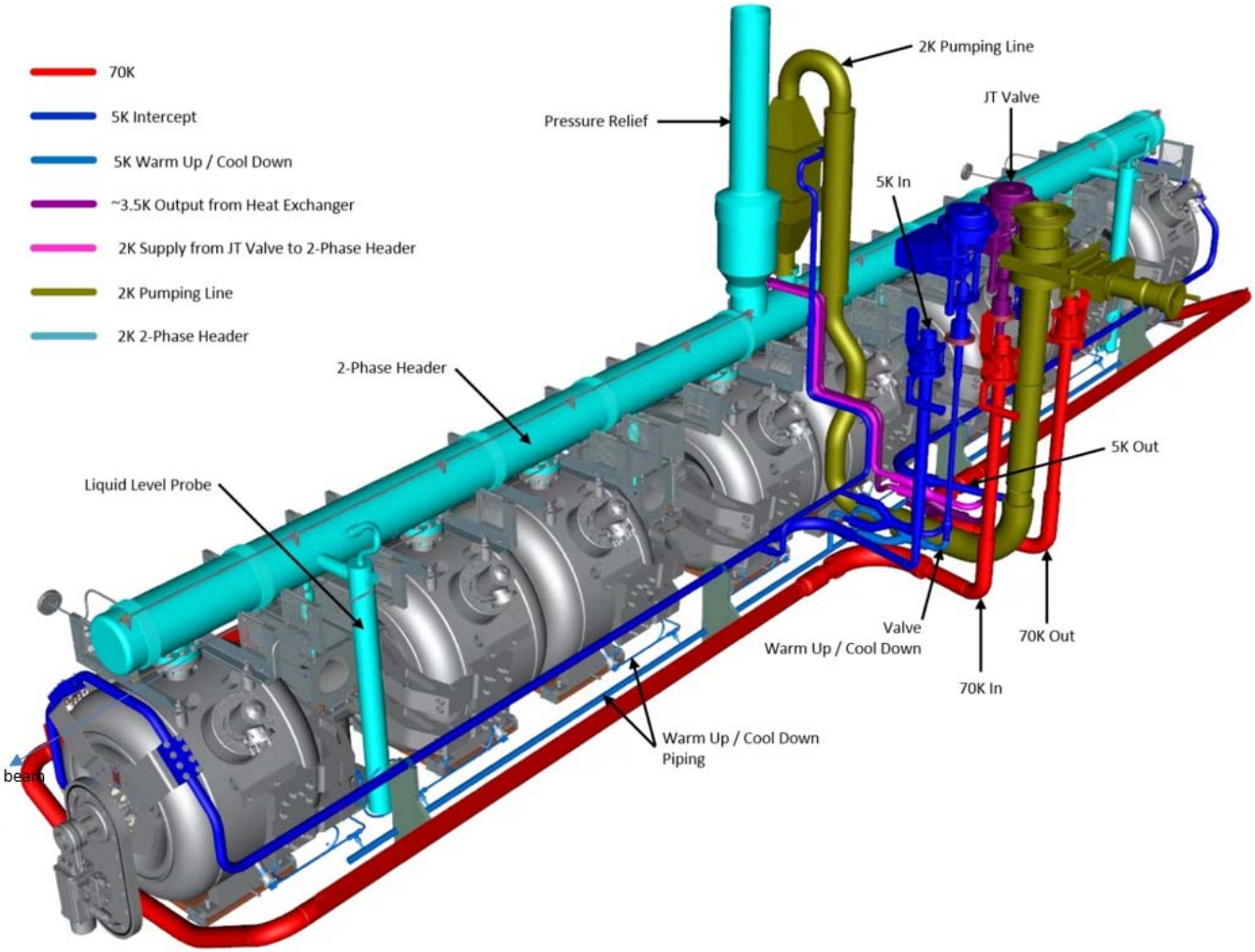

Figure 11.2: SSR1 Cryogenic circuits

Cryogenic Connections

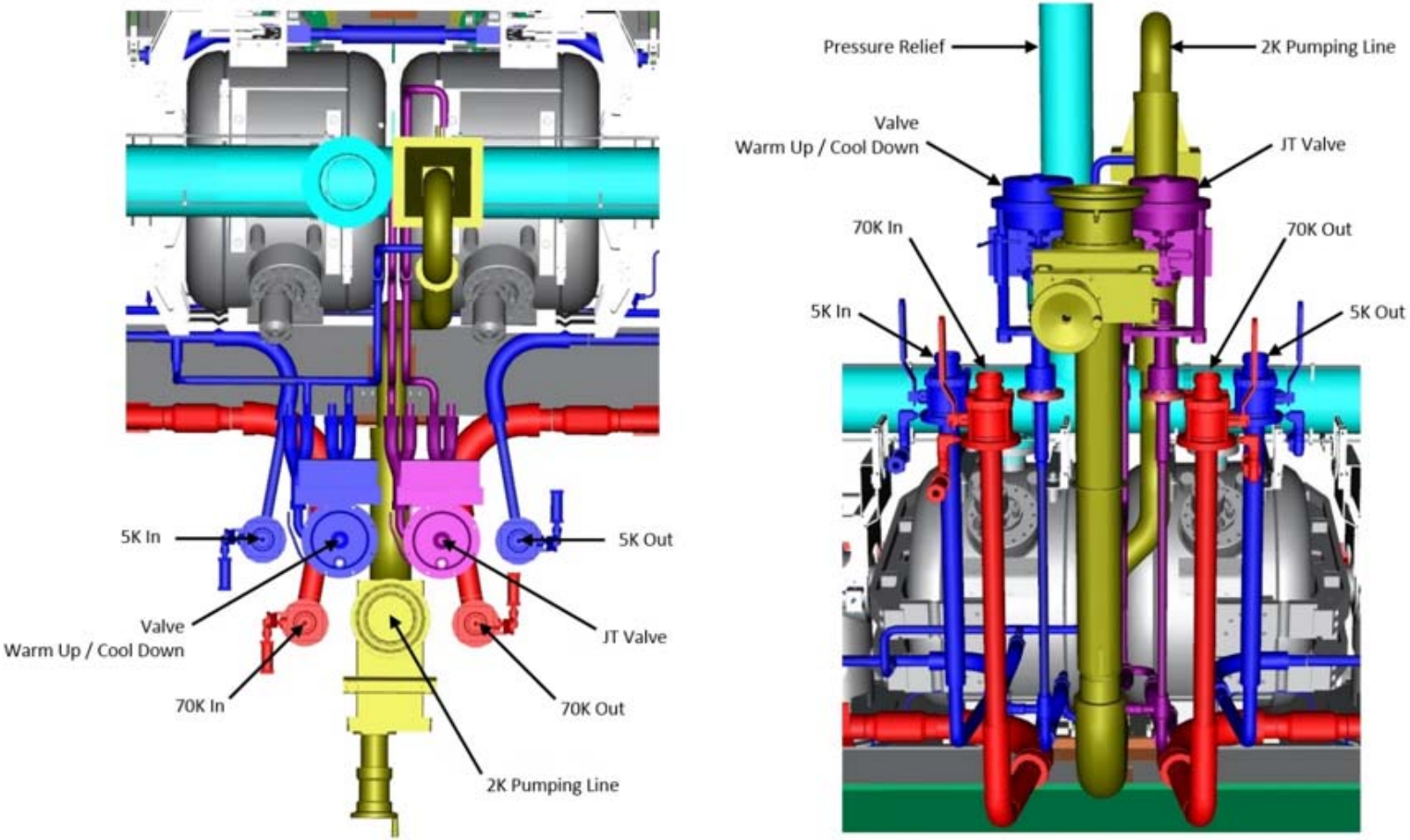

Figure 11.3: SSR1 Cryogenic connections

Cryomodule Vacuum Systems

Table 12.2 – Vacuum requirements

Requirements and devices of the cryomodule vacuum subsystems

		Beamline vacuum	Insulating vacuum
Description		In contrast to storage ring type light sources, here the beam particles pass the straight linac only once. Therefore the beamline vacuum pressure requirement with respect to losses due to scattering on the residual gas are relaxed. Effects like emittance growth, fast ion instabilities or dynamic pressure increase due to synchrotron radiation are negligible. However, particles can act as field emitters and thus limit the performance of the cavities.	The insulating vacuum serves to minimize convective heat transfer to the cavity helium vessel and heat conduction through residual gas the MLIs. For this purpose, a pressure of less than 1.0×10^{-4} Torr is required for the insulating vacuum space.
Pressure(Torr)	**At cold**	$\leq 1 \times 10^{-10}$	$\leq 1 \times 10^{-6}$
	prior to cool-down	$\leq 1 \times 10^{-8}$	$\leq 1 \times 10^{-4}$
Characteristics		Particle free pump-down/venting	Pressure dominated by water in MLI, permeation through many O-rings
Pumps	**Roughing**	Turbo, w/ particle free setup	Roots Blower, then Turbo
	In operation	Ion pump from ends of cryomodule	Turbo
Gauges	**Cold cathode gauge**	Inverted magnetron, BNC/SHV connectors, 2.75" CFF, MKS #104220008	
	Convection gauge	2.75" CFF, MKS #103170024SH	
All-metal right angle valve		DN-40 CF-R, manual actuator, hexagon head, VAT #54132-GE02	

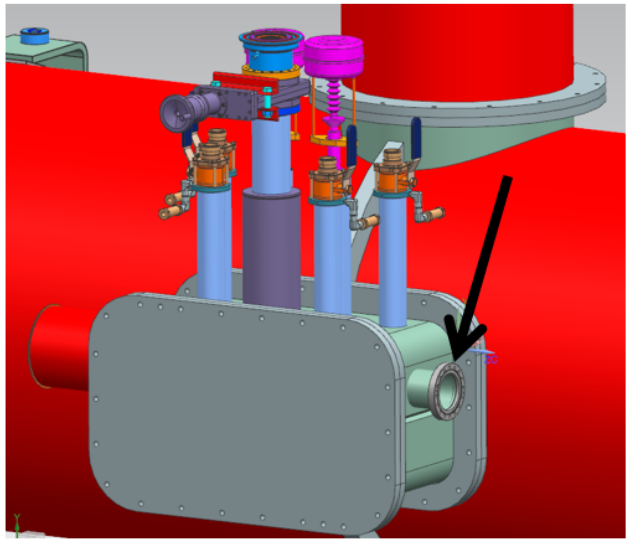

Figure 12. 1: Insulating Vacuum Pumping Port

Interlocks

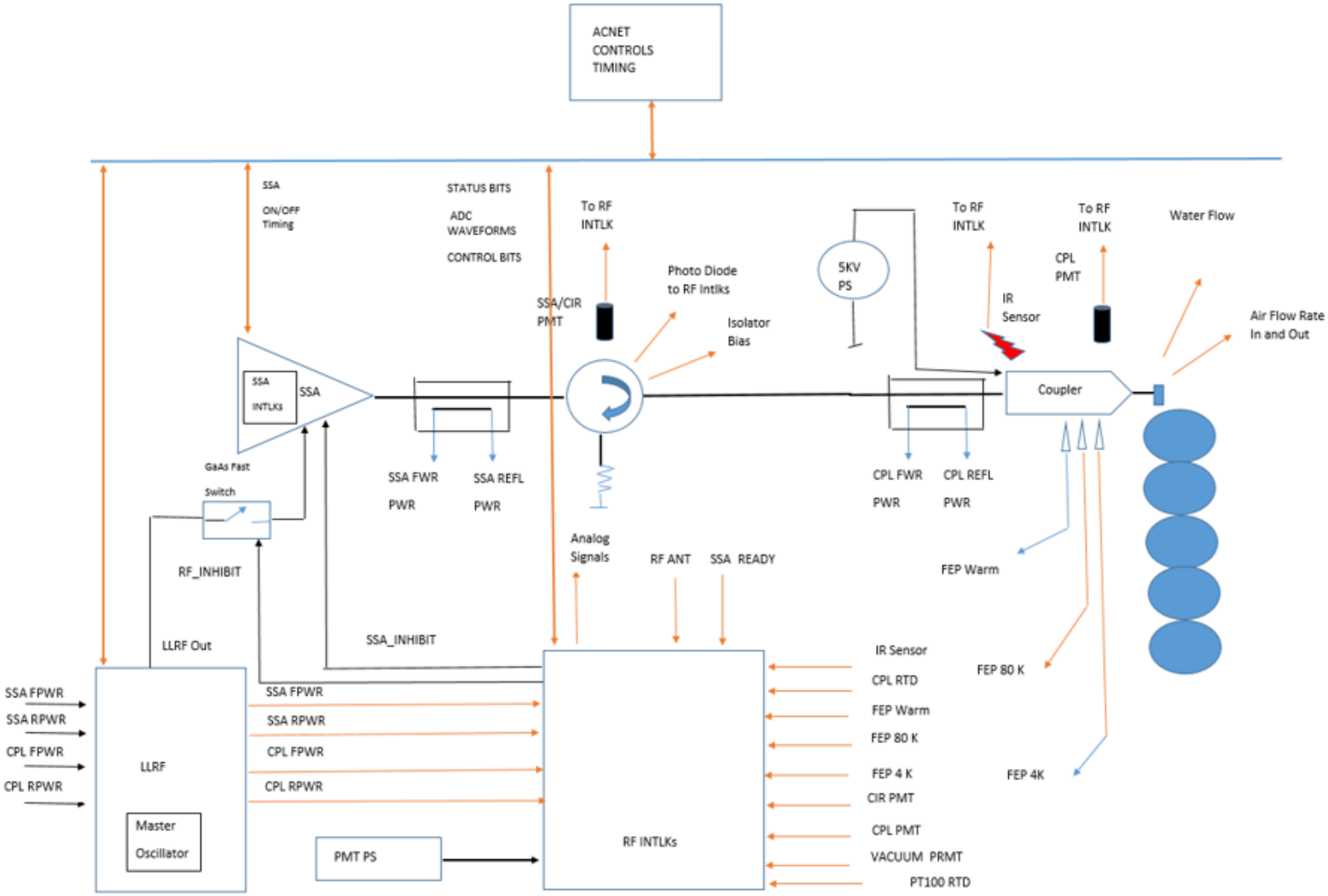

Figure 13. 1: Overview Schematic of the SSR1 interlocks

Microphonics

Isolation and damping of external sources of vibration from the SSR1 cryomodule is critical to achieve the tight resonance control specifications for PIP-II.

In PIP-II Injector Test, no active vibration control is planned. As such, passive measures are needed to ensure that the vibration environment is workable.

All hardware connecting to SSR1, and all hardware within 3m of the cryomodule shall conform to the vibration control best-practices documented in [7]. This specifies minimum qualitative requirements for system design. Further design and analysis may reveal that more stringent and quantitative requirements are needed for some systems. Specific considerations for some critical interfacing systems are listed below.

Cryogenics
Cryogenic lines should all include bellows/vibration breaks close to the cryomodule, with no hard mountings in between. This should isolate external mechanical vibrations from transmission into the module. Additionally, sharp transitions/restriction of helium flow should be avoided, reducing flow noise. These cryo lines should also be properly constrained and have their movement damped.

Fluids
RF drive lines will have water cooling, and similar best practices can be applied here as to cryo lines: no hard mountings connected to the cryomodule, avoid flow restrictions/transitions/throttling to reduce flow noise. These are less complicated because soft lines can be used, not in a vacuum jacket. These lines should also be properly constrained and have their movement damped.

Gas lines will be used to cool the cavity couplers. Given their proximity to the cavity, it will be important to avoid any flow noise in these lines. Experience with the RFQ air lines indicates that noise should not be an issue as the lines are sized. Additionally, they should be vented far from the cryomodule. Use of soft lines for supply and exhaust reduces danger of vibration transmission.

Cryomodule Footing
The cryomodule will be hard mounted to a girder. That is, it will essentially be rigid to the facility floor. As such, it is important to minimize vibration sources in nearby equipment that can couple into floor.

Beamline Connections
Bellows should be incorporated along the beamline to minimize vibration transmissions. These bellows should be in a free state during operations.

RF Connections
The coax line to the cavities (provided by AD-RF) should incorporate flexibility at the interface to the coupler. This should be implemented with a flexible section of coax near the cryomodule. Damping should be incorporated to further minimize transmission of vibration. Air flow in the RF couplers should not excite microphonics at dangerous level. .

Signal Connections
Mostly signal wires and small RF cables, these should be all either soft or flexible lines. Some strain relief will likely be built into these wires, and they are not considered a dangerous source of vibration.

External sources and measurement devices
The PIP-II Injector Test/CMTF facility was designed with consideration for vibration isolation. For example, the cryoplant is built on a separate foundation. Hardware near the cryomodule should be designed and installed per the best practices document [7]. However, given that PIP-II Injector Test is a shared facility and a test facility, there is currently no intention to impose broad vibration-control requirements or operations constraints within the facility. Experience with PIP-II Injector Test will guide further thinking in this matter.

The PIP-II Injector Test/Facilities team shall provide environment monitoring devices close to SSR1 so that environmental vibrations can be monitored. In the case of unacceptable microphonics, this system may be used to identify and mitigate driving sources.

Internal Monitoring Devices
There are no requirements or plans to incorporate vibrating measuring devices in the cryomodule.

Summary

- SSR1 ICD has been developed with many contributions from various sub-system leaders – thank you!
- The initial revision is being modified based upon comments made during the review process
- The document will be re-routed for checkers' sign-off soon
- Teamcenter # ED0004129
- Please refer to this document often as the cryomodule design matures
- Please make additional contributions to this document as details become available – revisions are easy to make