Fermilab

Managed by Fermi Research Alliance, LLC for the U.S. Department of Energy Office of Science

RFQ Electrical Installation and Conditioning

Jim Steimel

PIP-II

21 July 2015

Installation Order of Events

- Low Level RF Tasks
  - Install couplers without DC block.
  - Adjust orientation of loops for proper coupling.
  - Verify coupling still correct with DC block installed.
  - Measure coupling through all sensing loops.
  - Install sensing loop selection tree and verify operation.
- Leak check with couplers.
- Verify high voltage hold-off through couplers and DC block.
- Install final RF amplifier coaxial distribution.
- Install RF diagnostic cables.
- Test RFQ interlock system.

RFQ Input Coupler Status

- Four vacuum windows successfully brazed.
- Waiting for Mega's furnace to come on-line before brazing windows into coax section.
- Coax sections will get titanium coating after brazing is complete.
- Mega estimates delivery some time in August.

Low Level Input Coupler Tuning

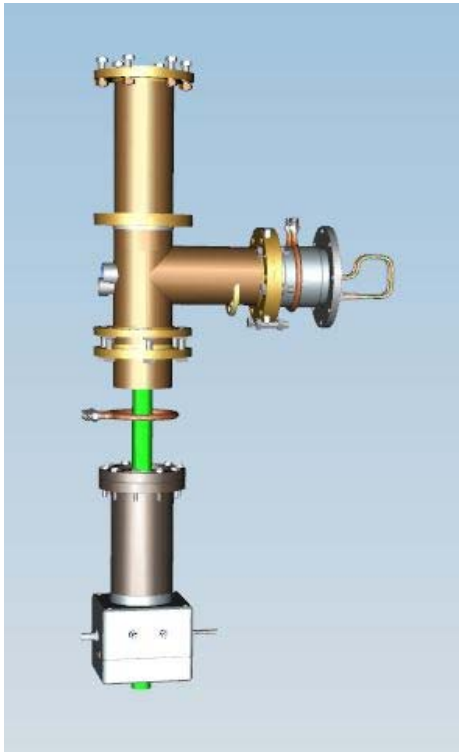

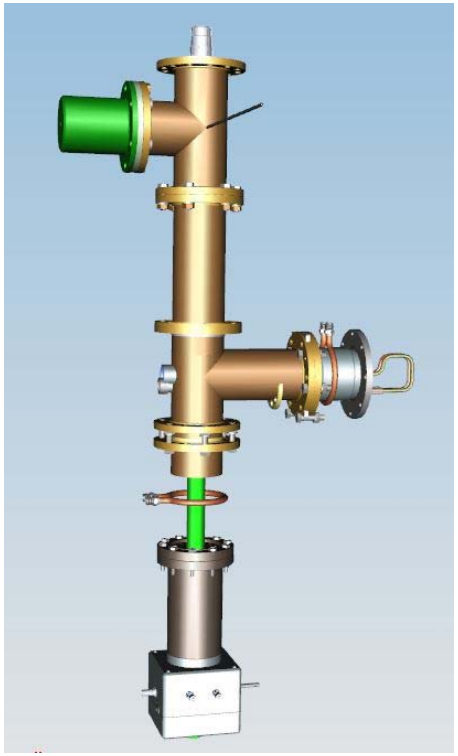

- Input coupler will be constructed on RFQ in pieces.
- Coupling tuned by rotating antenna. Antenna rotates freely while couplers connected (but not tightened).
- Only sections from left picture necessary for tuning.
- Right picture shows DC block added to coupler for verification of tuning.

Sensing Loop Verification

Relative coupling factors for the 48 sensing loops.

This will serve as the standard for future field profile measurements.

module	position	Quadrant 1	Quadrant 2	Quadrant 3	Quadrant 4
1	1	-59.96	-59.19	-58.17	-59.75
1	2	-58.86	-59.02	-58.59	-59.75
1	3	-58.65	-58.42	-58.90	-59.44
2	1	-58.79	-59.19	-60.15	-58.97
2	2	-59.50	-58.62	-59.91	-59.25
2	3	-58.14	-58.82	-59.48	-58.13
3	1	-59.97	-58.57	-59.39	-58.25
3	2	-59.24	-59.27	-59.63	-59.19
3	3	-59.75	-59.19	-58.99	-60.73
4	1	-59.80	-58.99	-59.11	-59.09
4	2	-58.30	-58.55	-60.10	-59.10
4	3	-59.84	-60.16	-58.77	-58.31

- John Staples has calibrated all 48 sensing loops during bead pull.
- We need to verify relative calibration after input couplers are installed.

Sensing Loop Switch Tree Select

- An RF switch tree will allow up to 6 loops to be monitored simultaneously.
- The tree reduces 48 signals to 6.
- Two (or more) loops will be permanently dedicated (LLRF and interlocks).

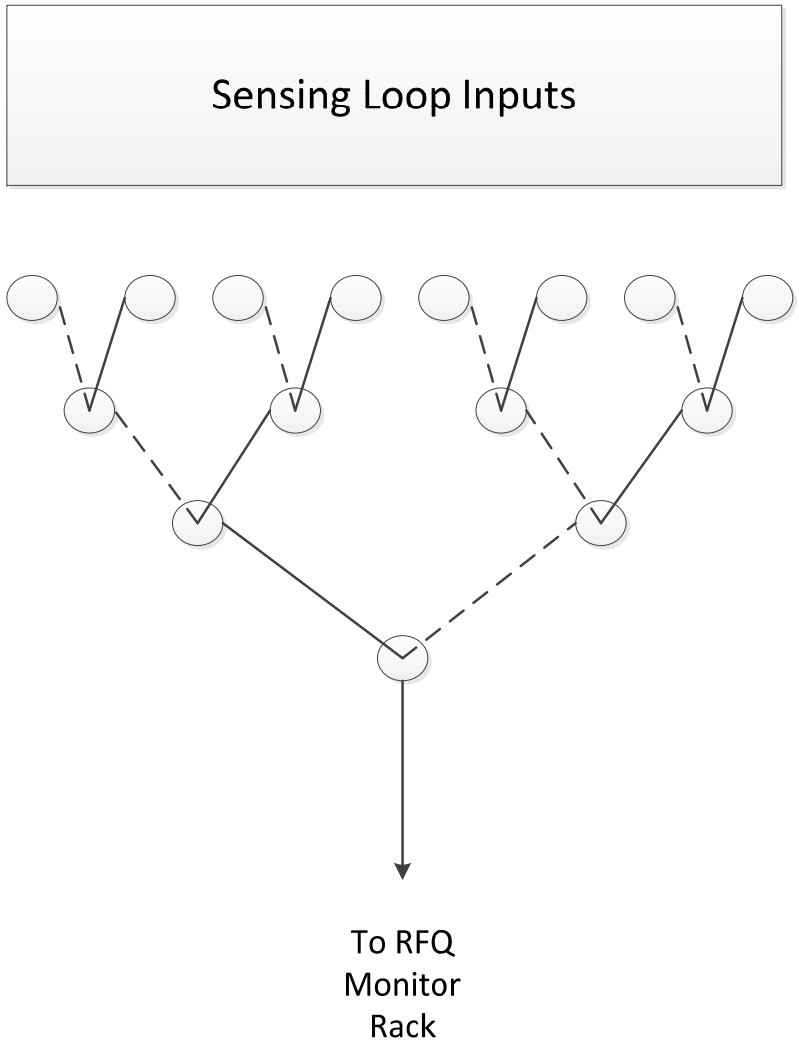

RF Fanback and Instrumentation

- Majority of RF instrumentation already in place from power amplifier commissioning.
- Right picture shows operational Synoptic display for RFQ, RF power distribution.

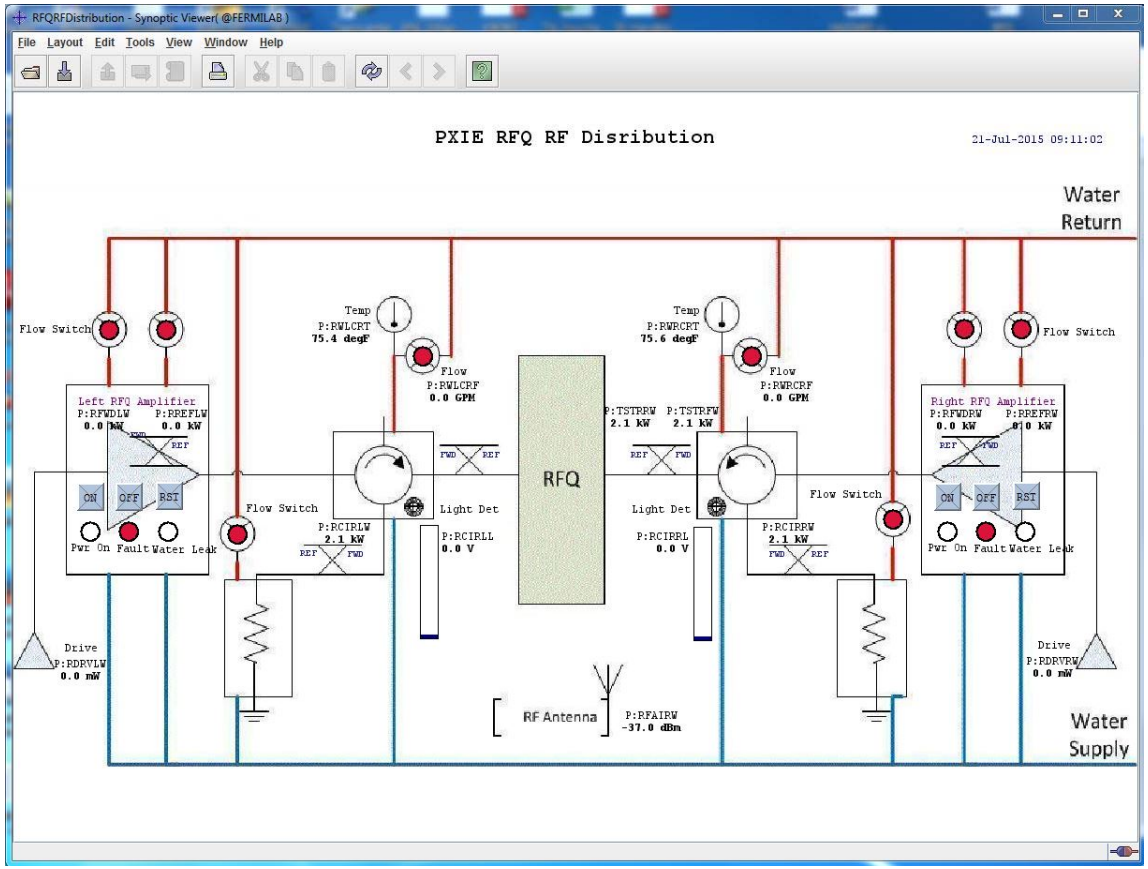

Fast Interlocks Block Diagram

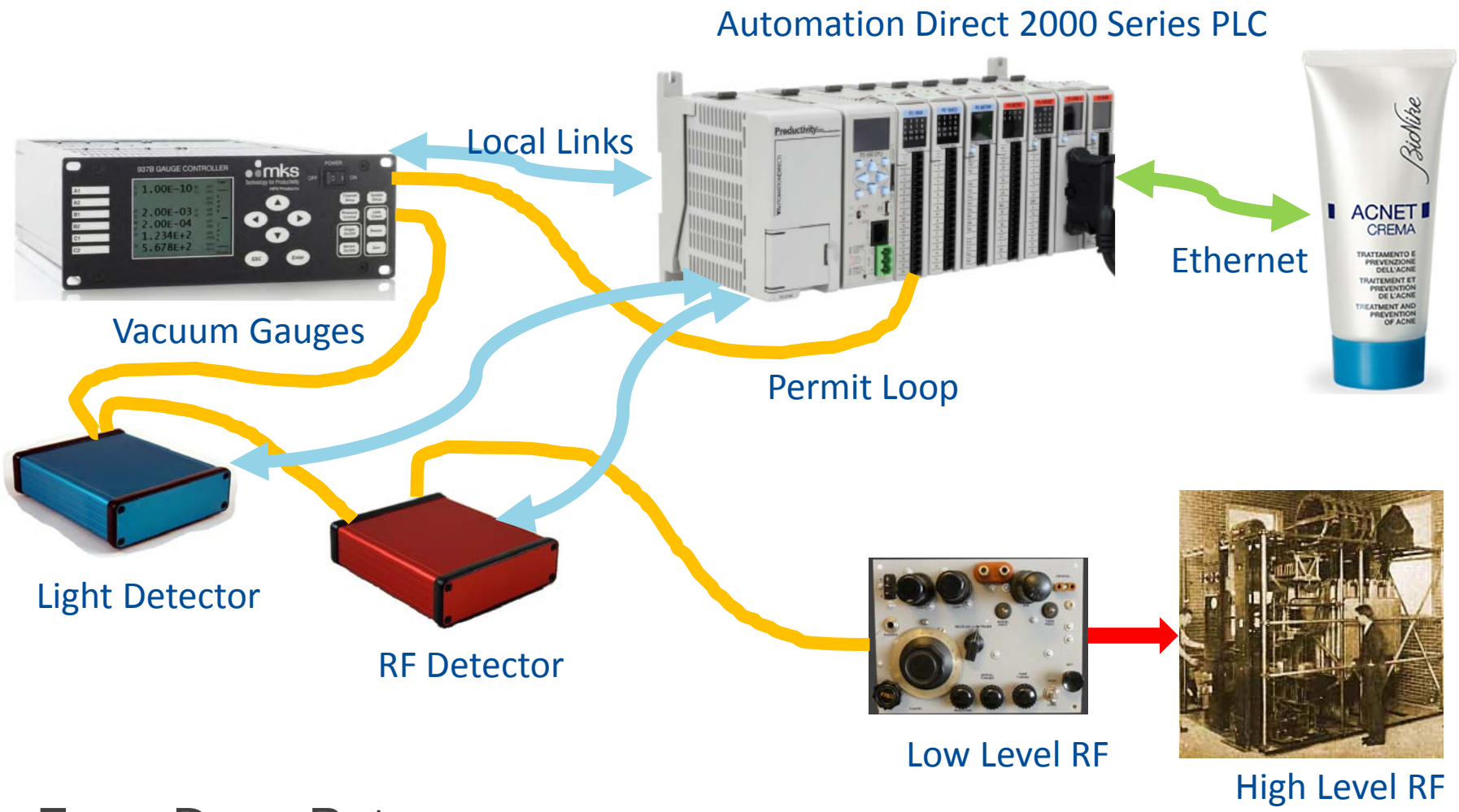

From Dave Peterson

Conditioning Order of Events

- Start with lower power CW input and increase power.
  - LLRF in Self-Excited Loop mode. It will track resonant frequency of the RFQ during conditioning.
  - Try to push through multipacting barriers.
  - Adjust high voltage bias if necessary.
  - Move to low duty pulsed operation if necessary.
- Bring up RFQ field to 10% above specified, operational field.
- Measure thermal time constants for resonance control design specifications.
- Connect x-ray spectrometer to end of RFQ to verify vane tip voltage.
- Begin connecting MEBT-1.

Pulsed RF Conditioning

- RFQ, RF power amplifiers never tested in pulsed mode.
- LLRF system does not have continuous transition between pulsed and CW operation, driven by data acquisition issues.
- ATLAS RFQ successfully conditioned using only CW.
- IMP and Fermilab linac RFQ conditioned in both pulsed and CW modes.

Measuring RFQ Thermal Properties

- Resonance control designers will spend a week measuring thermal properties to specify design parameters for their software.

From Andrew Lambert

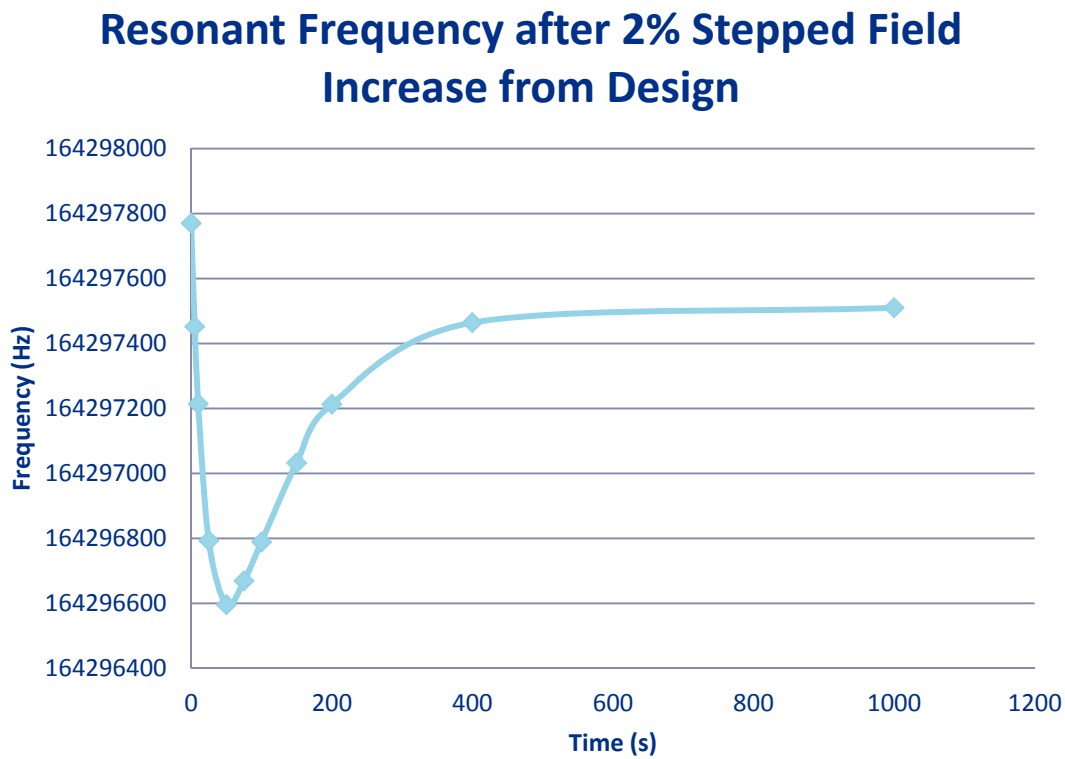

Frequency change of -260 Hz

RFQ X-ray Spectroscopy

- Amptek detector due to arrive this week.
- The detector is sensitive to frequencies generated by 60kV vane tip voltage.
- May have time to test system on buncher cavity.

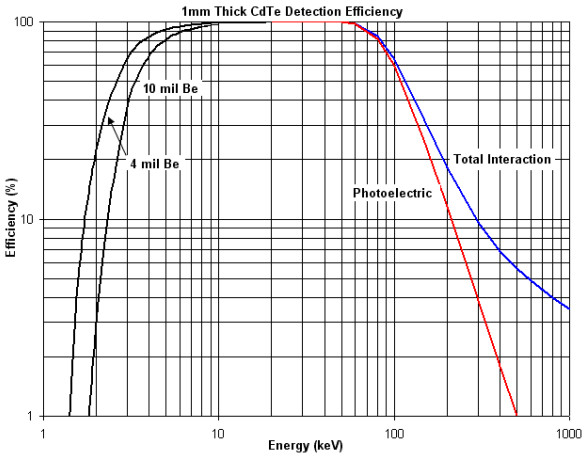

From Vic Scarpine

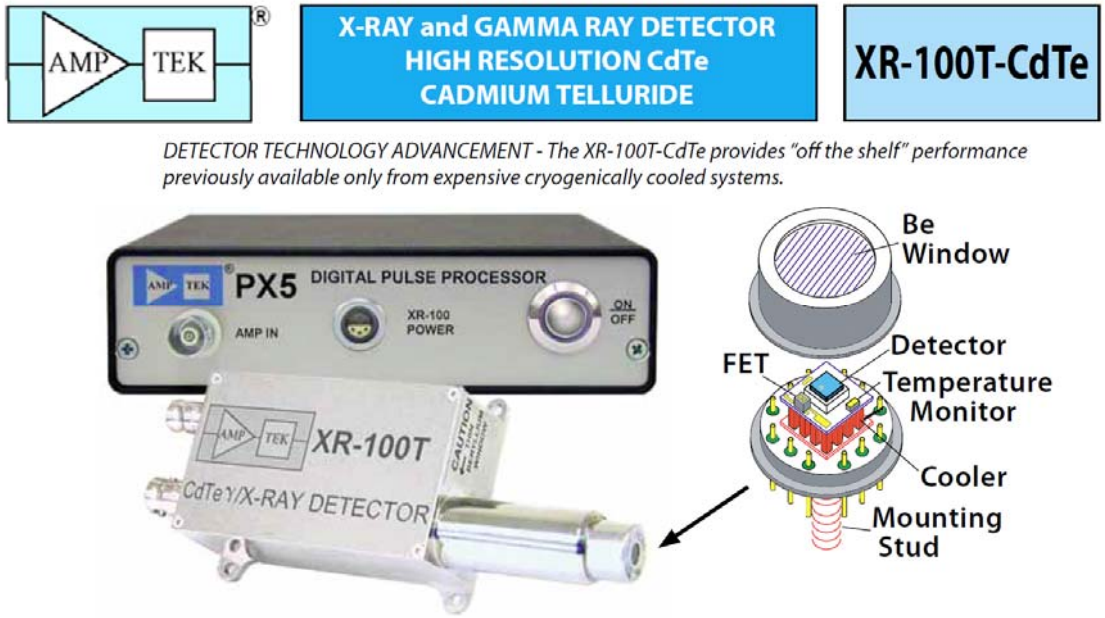

	Task Mode	Name	Duration	Start	Finish
1		Target RFQ delivery date	0 days	Mon 8/24/15	Mon 8/24/15
2					
3		**RF device testing (Sun)**	**42 days**	**Thu 6/4/15**	**Fri 7/31/15**
6		**LEBT Preparations (Prost)**	**5 days**	**Mon 8/10/15**	**Fri 8/14/15**
12		**Electrical Preparations (Carlson)**	**10 days**	**Wed 8/12/15**	**Tue 8/25/15**
15		**Water Preparations (Czajkowski)**	**20 days**	**Wed 7/1/15**	**Tue 7/28/15**
18		**Mechanical Preparations (Baffes)**	**5 days**	**Mon 8/17/15**	**Fri 8/21/15**
21		Cave ready			
22		**RFQ Installa**			
23		**Stage RF**			
27		**RFQ into**			
28		Roll in			
29		Lower rough align			
30		Match machine brackets, bolt to floor	2 days	Thu 9/3/15	Fri 9/4/15
31		Mate to lebt kf flange	1 day	Mon 9/7/15	Mon 9/7/15
32		**Electrical work (Carlson)**	**12 days**	**Mon 9/7/15**	**Tue 9/22/15**
37		**Coupler installation (Pronitchev, Kazakov)**	**22 days**	**Wed 8/26/15**	**Thu 9/24/15**
38		Input Couplers Arrive	0 days	Wed 8/26/15	Wed 8/26/15
39		Phase 1 - install low level components	3 days	Tue 9/8/15	Thu 9/10/15
40		Tune coupler antennas	3 days	Fri 9/11/15	Tue 9/15/15
41		Phase 2 - install coupler DC blocks and verify tuning	2 days	Wed 9/16/15	Thu 9/17/15
42		Tighten down vacuum interface	1 day	Wed 9/16/15	Wed 9/16/15
43		Plumb air and water	1 wk	Fri 9/18/15	Thu 9/24/15
44		Interface instrumentation and high voltage	1 wk	Fri 9/18/15	Thu 9/24/15
45		**Vacuum work (Chen)**	**10 days**	**Tue 9/8/15**	**Mon 9/21/15**
48		**Final Alignment (Baffes, Bocean)**	**4 days**	**Fri 9/18/15**	**Wed 9/23/15**
51		**Instrumentation Work (Steimel/Scarpine?)**	**15 days**	**Wed 9/16/15**	**Tue 10/6/15**
54		**Water work (Czajkowski)**	**25 days**	**Tue 9/22/15**	**Mon 10/26/15**
59		**Rf coax installation (Pasquinelli)**	**97 days**	**Mon 6/15/15**	**Tue 10/27/15**
66		**LLRF System (Chase)**	**80 days**	**Mon 6/1/15**	**Fri 9/18/15**

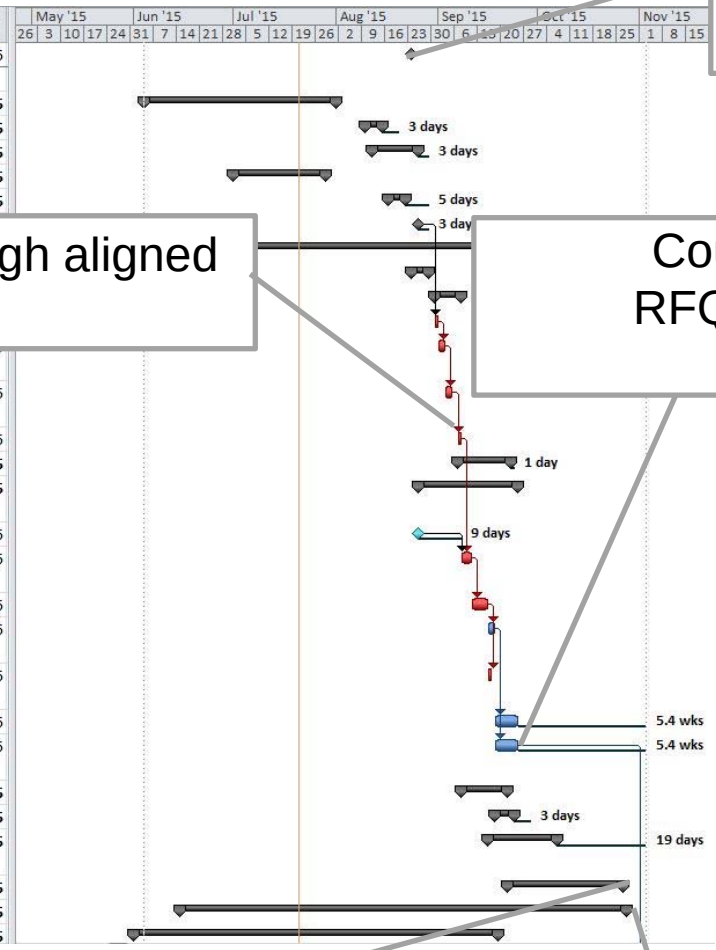

RFQ Delivery: Assume 8/24

RFQ in cave and rough aligned 9/7

Couplers installed RFQ under vacuum 9/24

Cooling system work complete 10/26

Last piece of coax installed 11/2 RFQ ready for conditioning