Factors Influencing Enclosure for PXIE RFQ Commissioning

Jim Steimel

RFQ Safety Issues

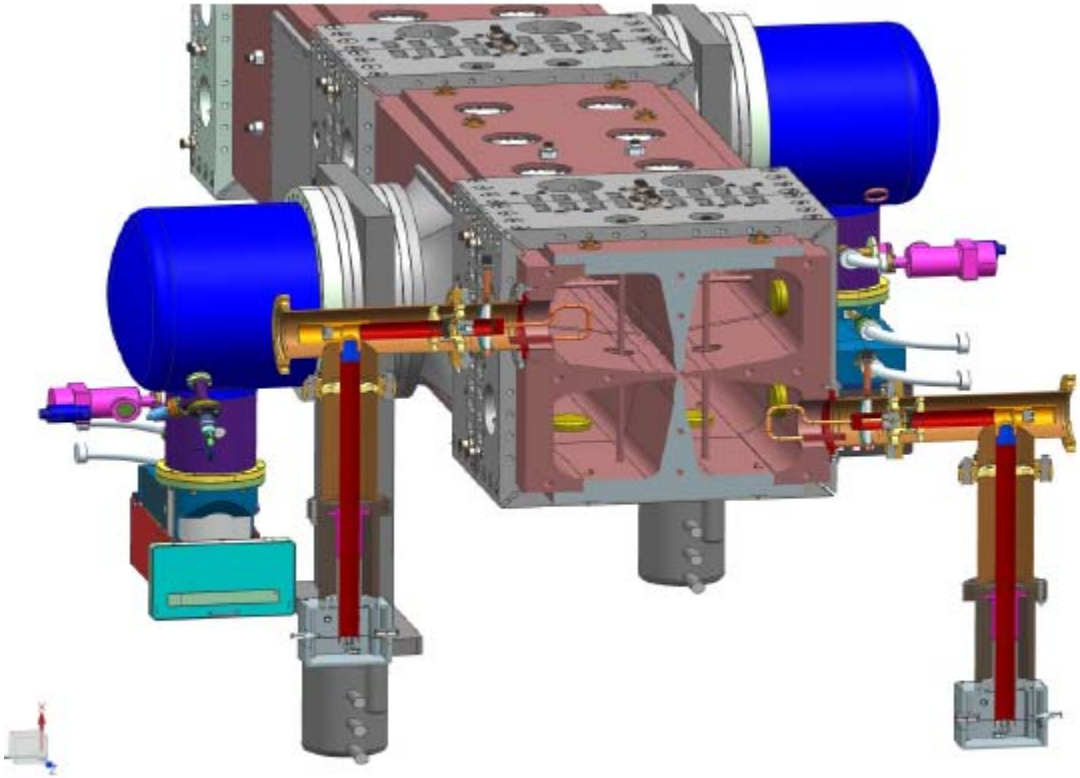

- Beam activated radiation (2.1 MeV protons under neutron threshold for copper and steel)
- RF generated x-rays
- Non-ionizing RF radiation (RFQ will not leak RF unless there is a vacuum leak).
- High temperature air (input coupler cooling)

RFQ X-ray Generating Parameters

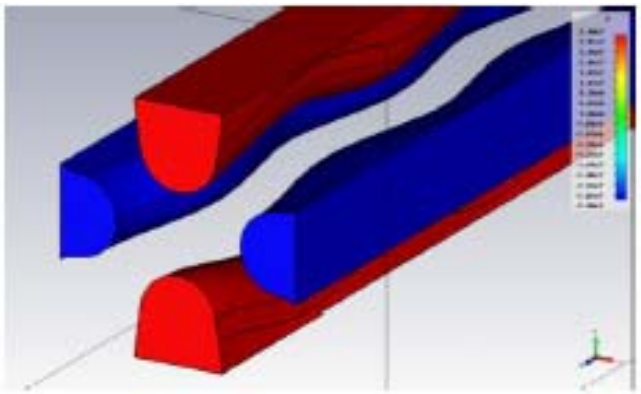

Potentials of ± 30 kV assigned to the electrodes.

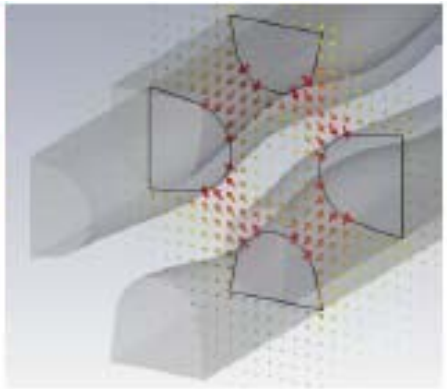

Electrostatic field

Highest E-fields in RFQ is across vane tips. Most likely place for high potential spark.

Parameters	PXIE
Frequency, MHz	162.499
Frequency of dipole mode, MHz	181.99
Q factor	14985
Q factor drop due to everything, %	-14.7
Power loss per cut-back, W (In/Out)	336/389
Total power loss, kW	73.8
L_max, mm	172.73

- Simulated power required for 60kV is about 75 kW.
- 150 kW available RF power.
- Potential could reach ~85kV for full, unprotected drive power with no beam loading.

RFQ Intrinsic Shielding

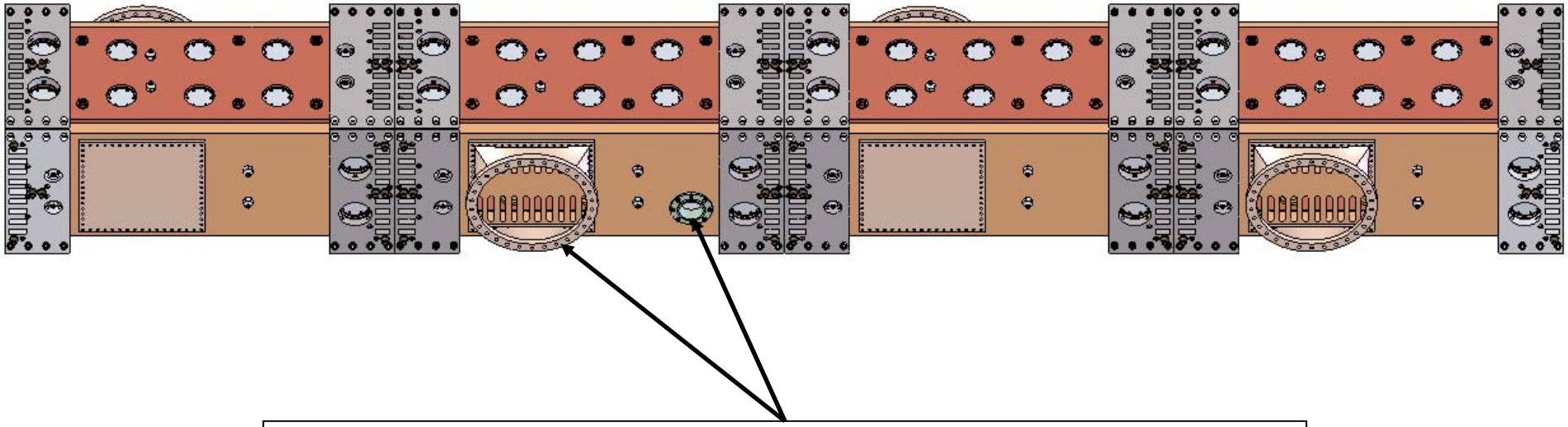

Most of RFQ shielded by at least 3cm of copper. Only exposed openings are vacuum ports (x4) and input ports (x2)

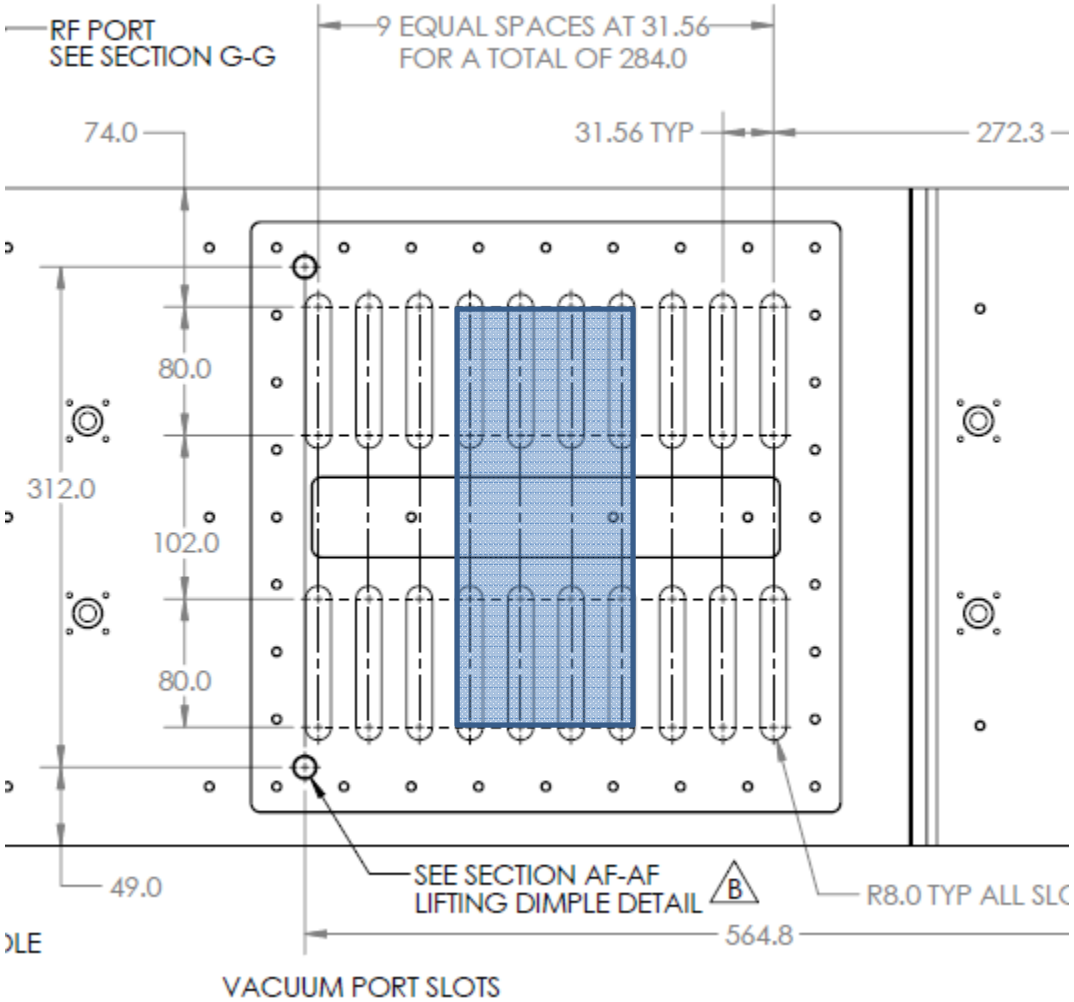

Conservative estimate of effective exposed area and solid angle through vacuum ports.

RFQ Shielding

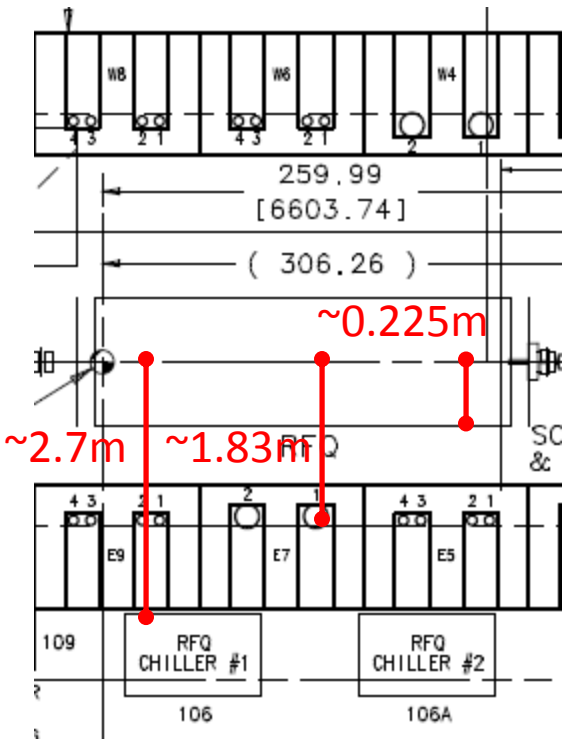

- Closest point to RFQ vanes is just west of shielding wall (~1.7m).
- Assume about 1.75A of available current to spark (based on 150kW drive).
- Shielding thickness assumed to be 1-1/2 ft. due to possible crack penetration.
- Shielding thickness is sufficient to shield potential x-rays through vacuum ports due to RFQ sparking.

162.5 MHz Power Coupler with DC Block

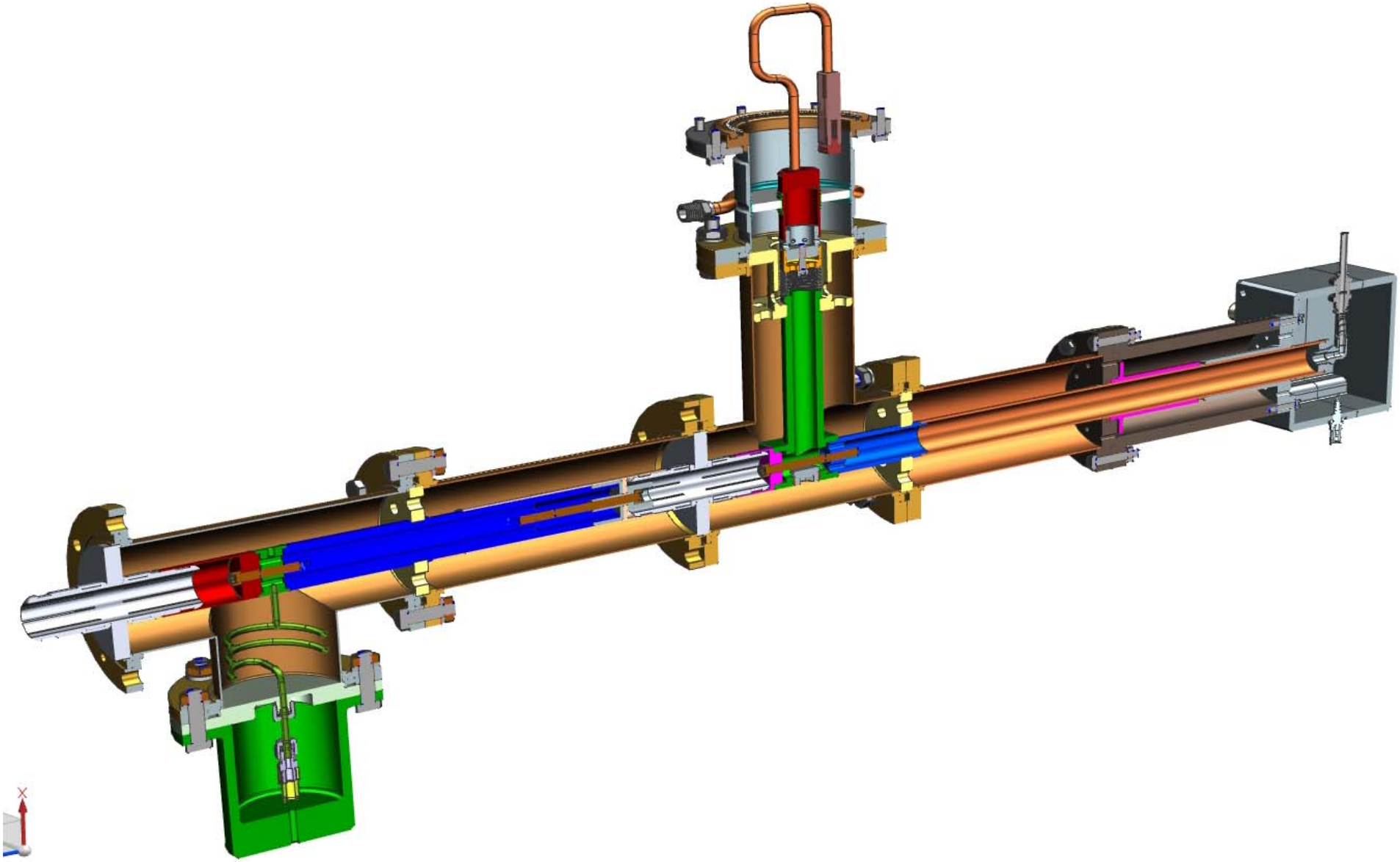

Input Coupler Air Cooling

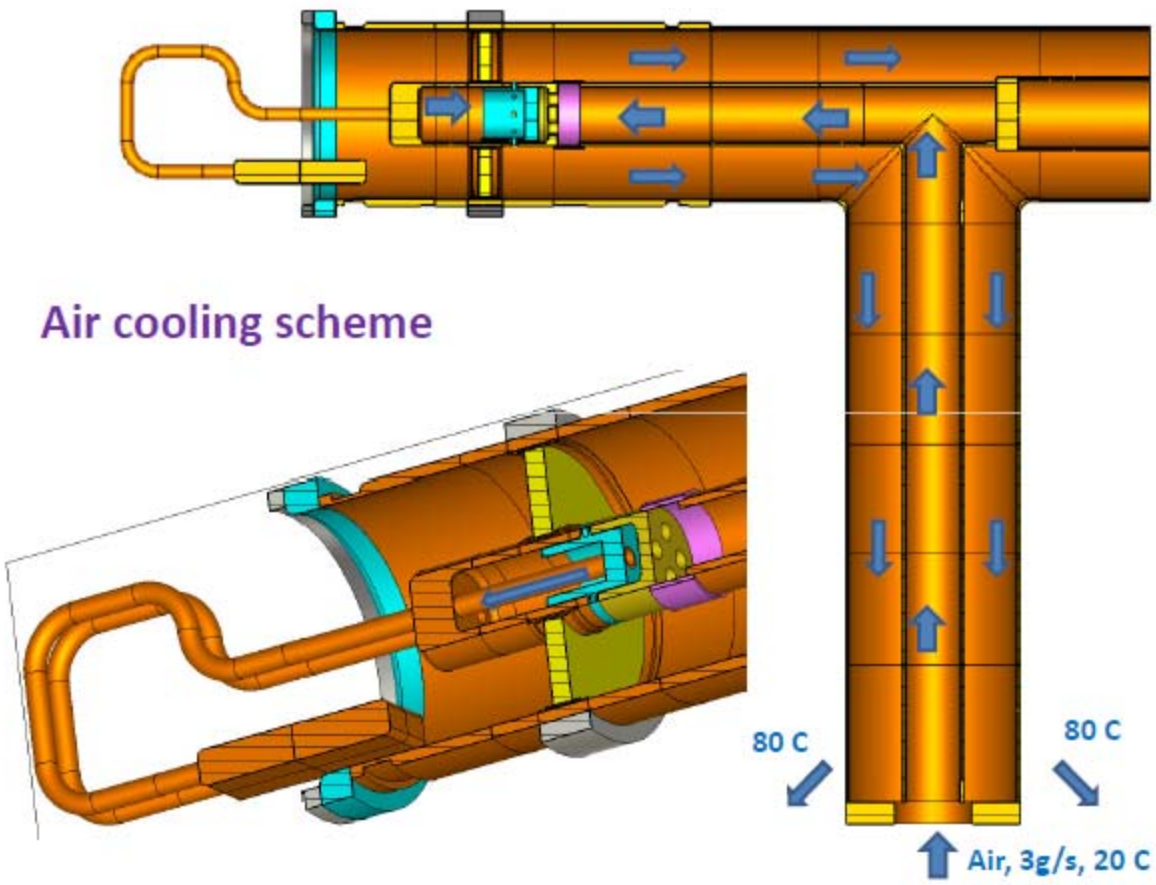

Cooling exhaust temperature estimated to be as high as 80C.

Conclusions

- RFQs with similar field specifications have produced external x-rays on the order of 100mR/hr at 0.5m through 4mm of steel during operation.
- We will need enough shielding to commission the RFQ for accident conditions, and present shielding design seems sufficient.
- We need to research mitigation of hot air hazard.
- It is highly unlikely we will be able to operate RFQ with an open enclosure.