PXIE RFQ Status

04-22-2014

FNAL PXIE Scorecard	M1V	M1V	M1H	M1H	M2V	M2V	M2H	M2H	M3V	M3V	M3H	M3H	M4V	M4V	M4H	M4H	Module 1	Module 2	Module 3	Module 4
last update 4/16/2014																				
Material at LBNL	x	x	x	x	x	x	x	x	x	x	x	x	x	x	x	x				
Machine ends	x	x	x	x	x	x	x	x	x	x	x	x	x	x	x	x				
Rough Machine all sides	x	x	x	x	x	x	x	x	x	x	x	x	x	x	x	x				
Gun drill	x	x	x	x	x	x	x	x	x	x	x	x	x	x	x	x				
Flow check	x	x	x	x	x	x	x	x	x	x	x	x	x	x	x	x				
Machine C'bores	x	x	x	x	x	x	x	x	x	x	x	x	x	x	x	x				
EBW plugs	x	x	x	x	x	x	x	x	x	x	x	x	x	x	x	x				
Flow check / vac check	x	x	x	x	x	x	x	x	x	x	x	x	x	x	x	x				
Back side machine	x	2/4/2	x	x	x	x	x	x	2/4/2	2/4/2	2/4/2	2/4/2	3/14/	3/14/	3/14/	3/14/				
Inspection	x	2/11/	x	x	x	x	x	x	2/10/	3/14/	2/12/	3/14/	3/14/	3/14/	3/14/	3/14/				
Mount to machining plate	4/3/2	4/15/	3/19/	4/3/2	x	x	x	x												
Inside rough machine	4/3/2	4/15/	goug	4/3/2	x	x	x	x												
Inspection	4/3/2	4/15/	4/15/	4/3/2	x	x	x	x												
Inside finish machine	4/4/2	4/17/	4/15/	groov	x	x	x	x												
Inspection	4/15/		4/17/	4/4/2	x	x	x	x												
Machine Modulations				starte	x	2/12/	x	x												
Full CMM inspection					x	2/13/	x	x												
steam clean					3/14/	3/14/	3/14/	3/14/												
Test assemble					4/3/2	4/3/2	4/3/2	4/3/2												
UHV clean																				
Install braze wire																				
Final assemble																				
Braze																				
Vacuum check																				
Flow check																				
CMM inspection																				
End machining																				
Pressure check																				
Steam cleaning																				
Attached to mounting frame																				
Joint Plates installed																				
Slug tuners installed																				
Vacuum check																				

RFQ Fabrication Summary

- Module 2 bead pull test complete (Timer will give a talk next).
- Vane machining continues.
- We are waiting for braze vendor to modify oven to handle large mass of modules. No firm time estimate, yet.
- LBNL will go into two month shutdown, May 1 that will impact braze preparation.
- Delivery estimate expected in early March 2015.

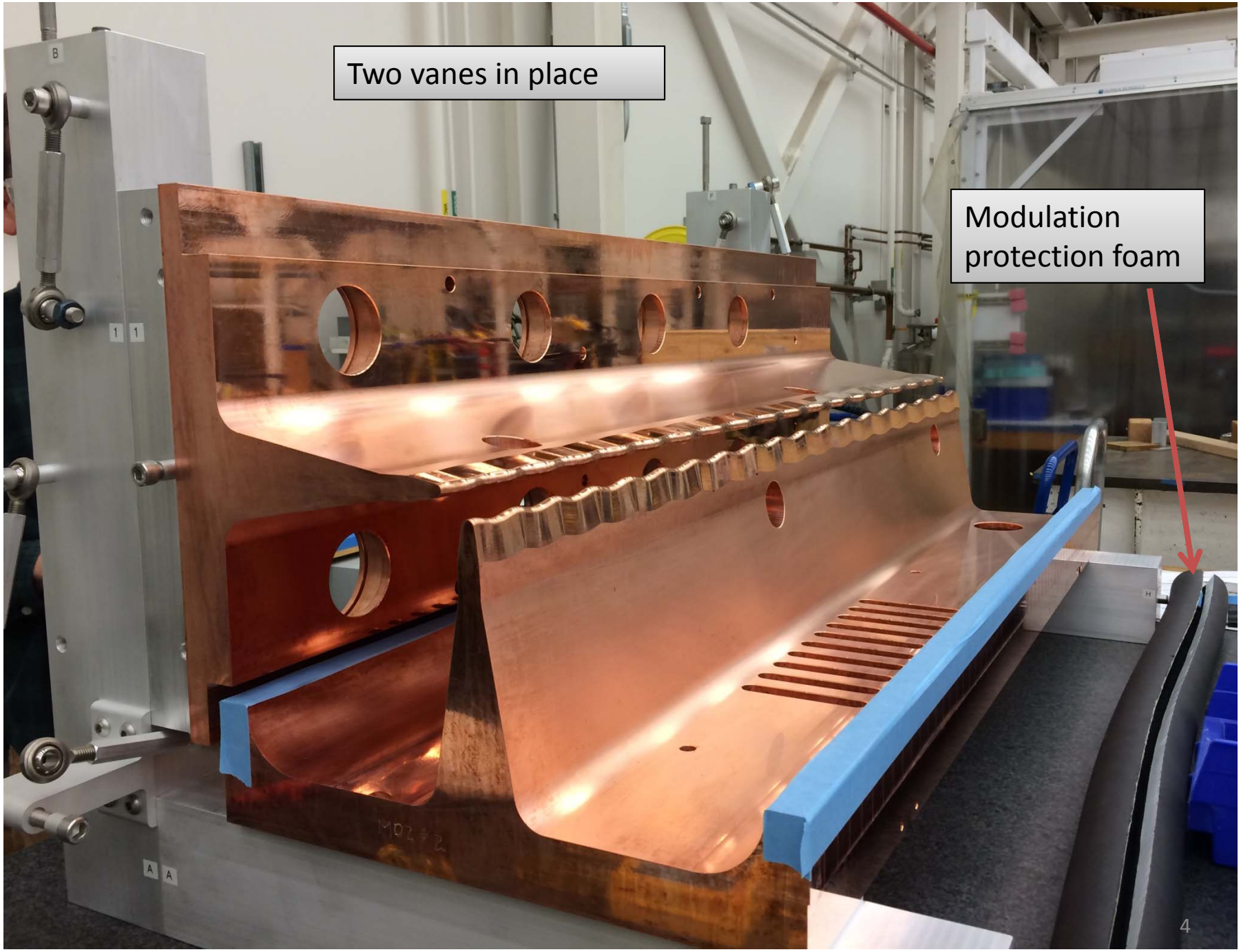
Two vanes in place
Modulation protection foam

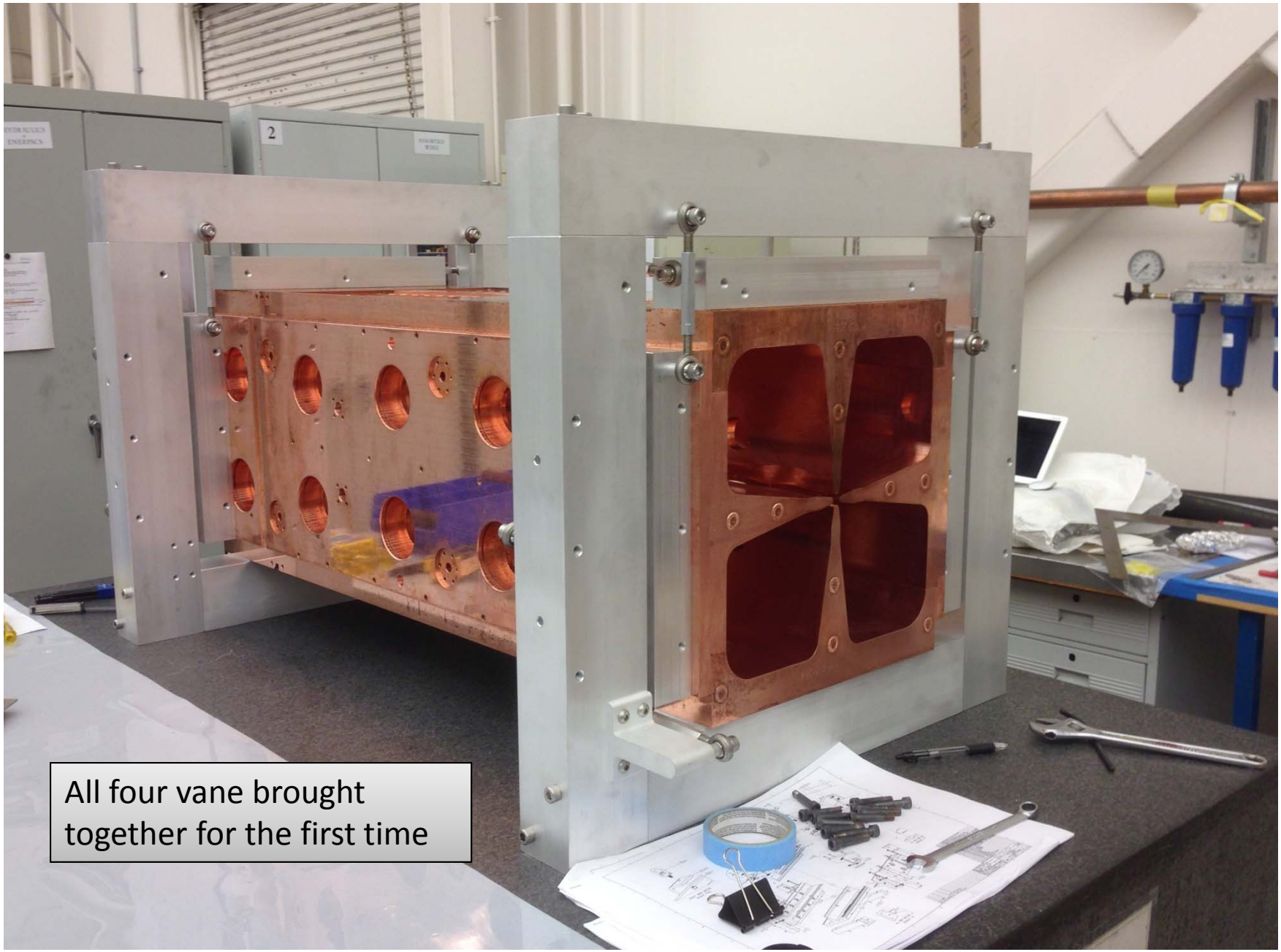
All four vane brought together for the first time

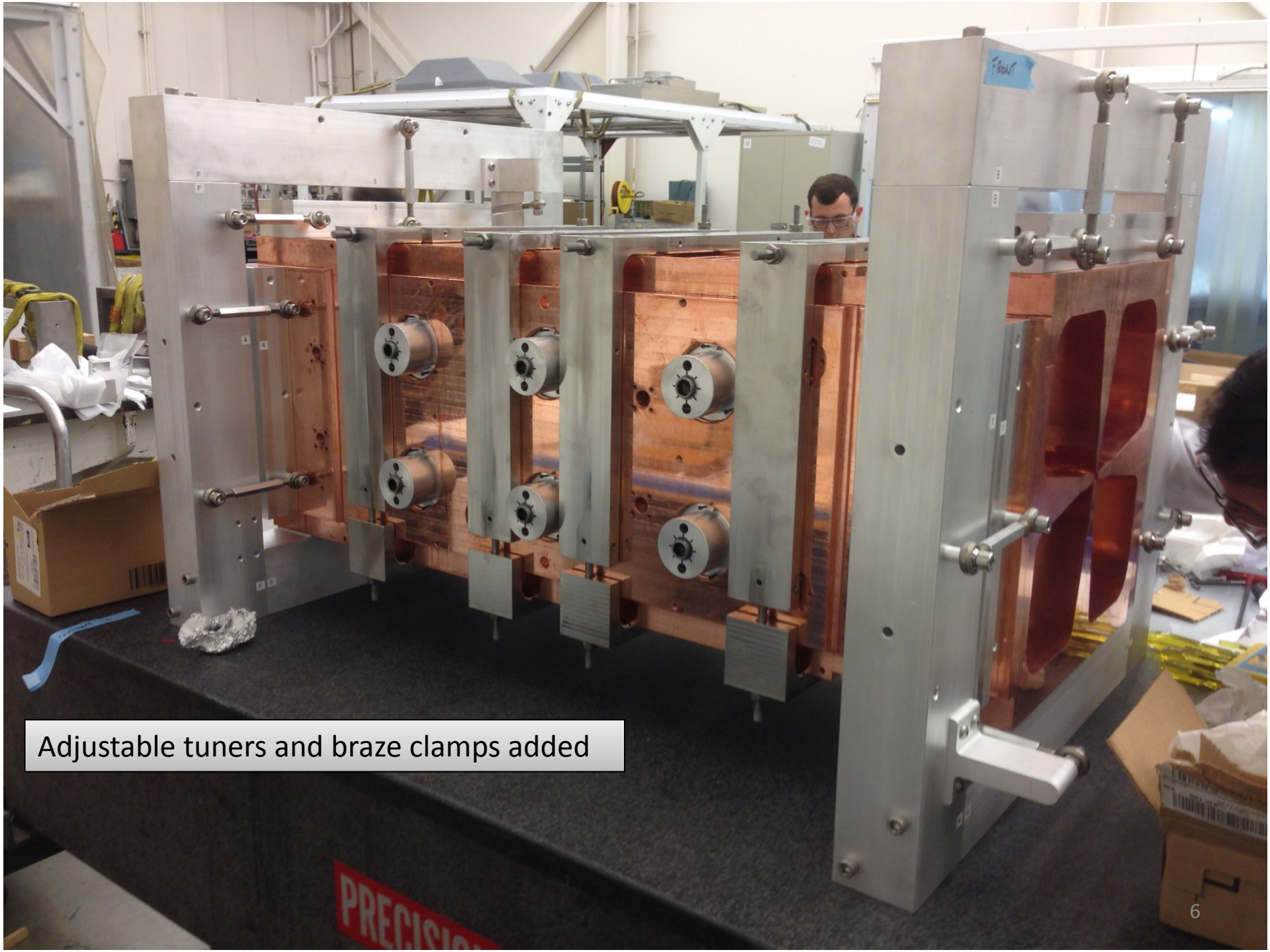

Adjustable tuners and braze clamps added

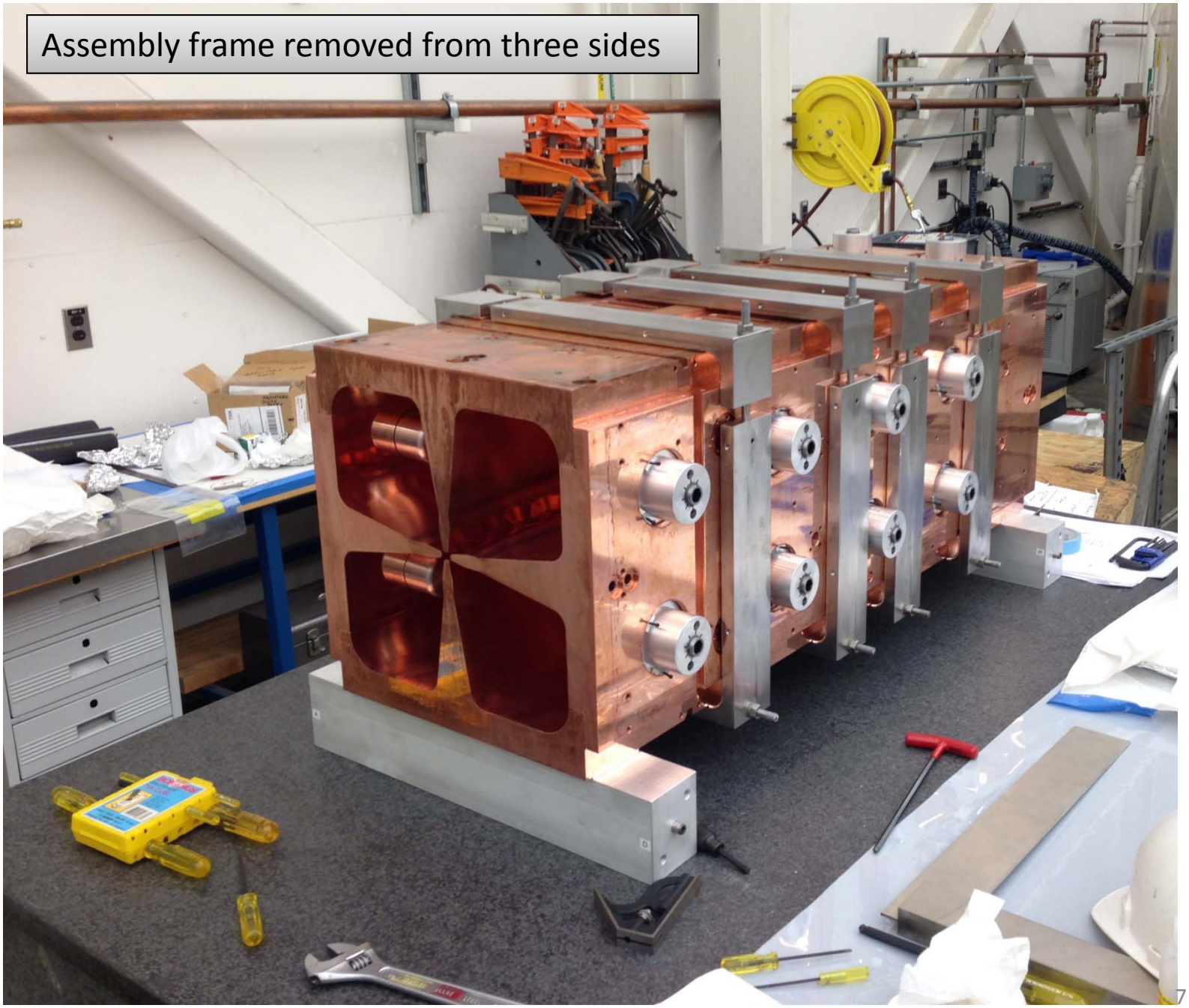
Assembly frame removed from three sides

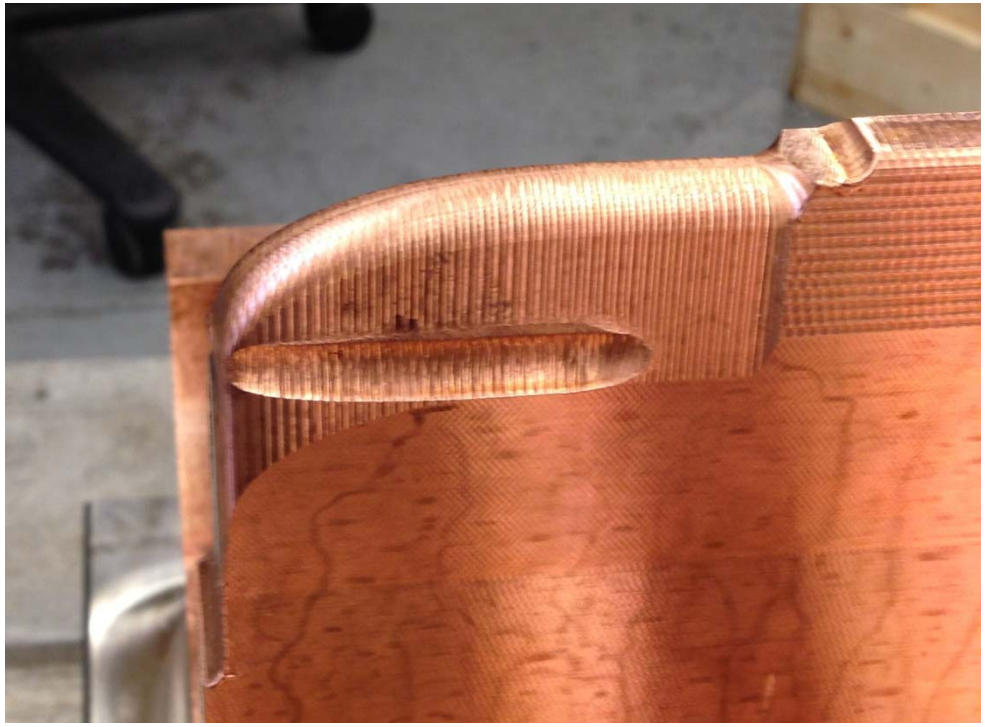

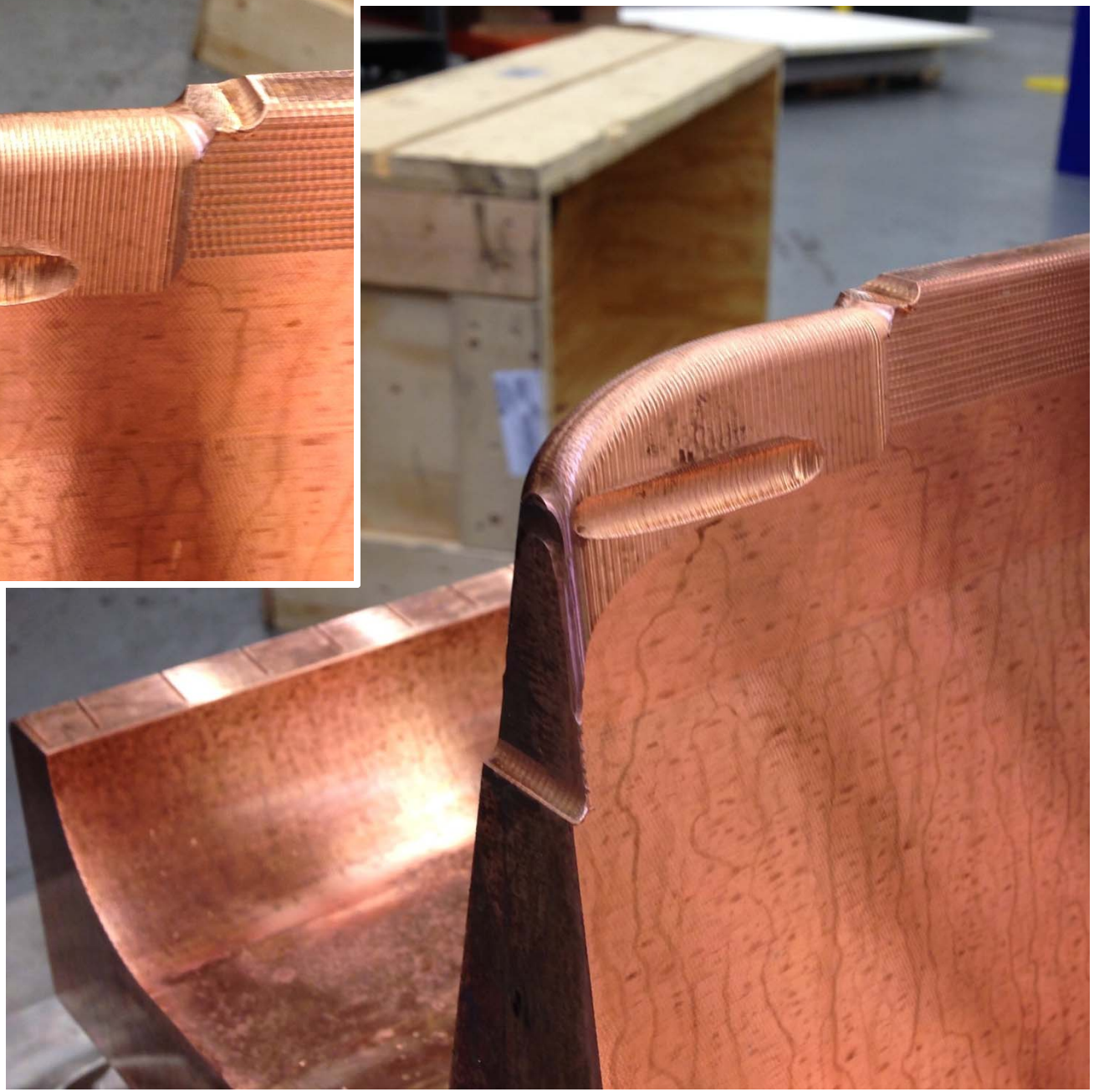

Two views of the gouge that happened on March 24, 2014

Simulation results

- Frequency and Q_0 differences are within numerical error of the simulation.

	f_0 (MHz)	Q_0
Without gouge	162.427	13951
With gouge	162.431	13958

- Local field plots show negligible effects from gouge, see next two slides.

LBNL thinks a decision on which option to use should wait until all the vanes are machined and module 2, 3 and 4 are brazed together. We should finish all machining to make sure we don't need the spare blank vanes for a worse non-repairable machining error or a disastrous event.

If we get to the point where Module's 2, 3 and 4 are brazed together and we did not have anymore problems, we have three ways to complete Module 1.

A. Use the gouge vane
B. Use the full size test vane
C. Use the blank spare vane and machine it as a Module 1 horizontal vane.

Wire Groove Error

Perfect machining

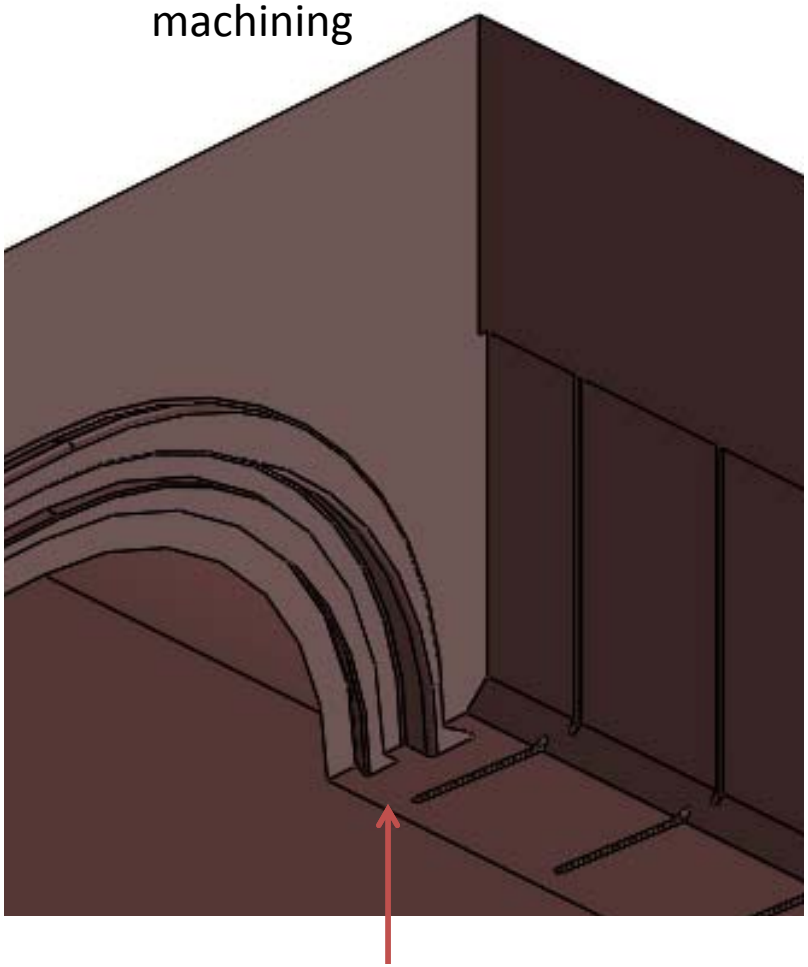

Wire groove is well away from both grooves

As machined.

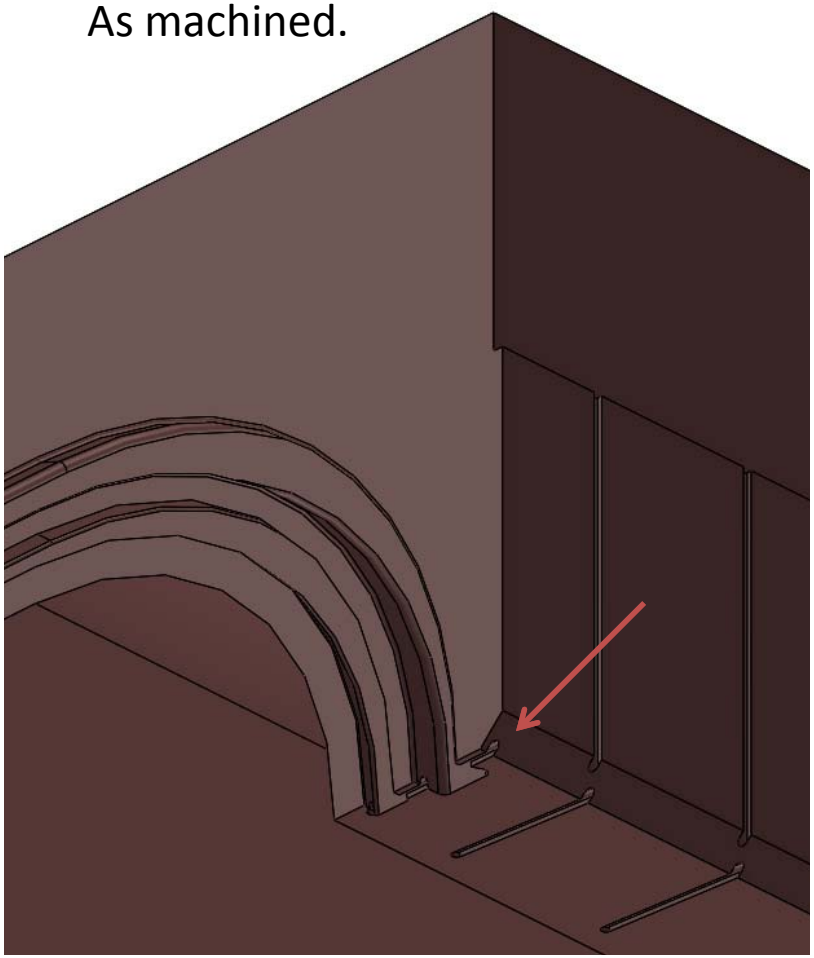

Its hard to see, but the one wire groove passes through both grooves.

Repair Plan

LBNL would like to see the canted spring and O-ring groove machined into the FNAL end plate instead.

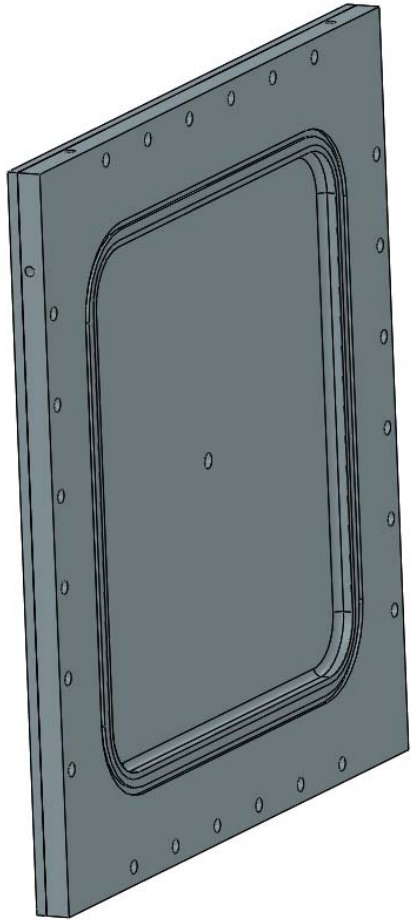

The FNAL model I have of the end plate already shows an O-ring groove. The actual groove required is twice as deep as shown, but there is room, plus room for the canted spring, without breaking into the cooling passage.

Adding the O-ring groove and canted spring groove to this part should be easy.

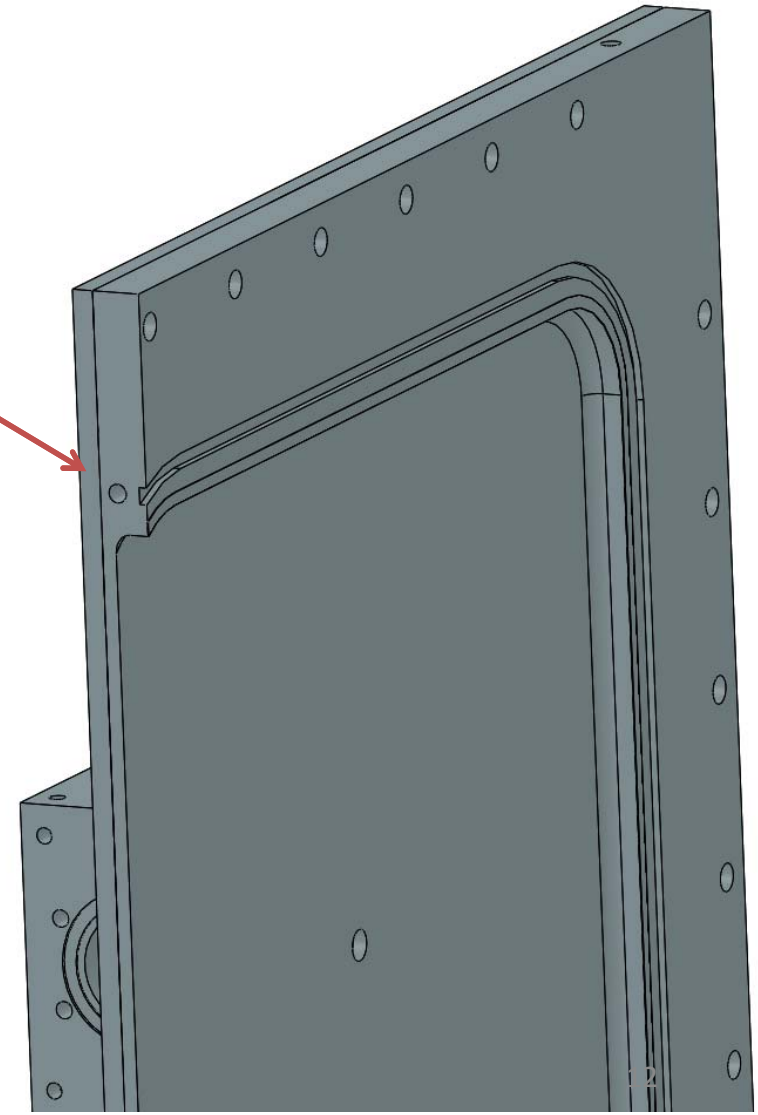

RFQ Amplifier and Input Coupler Summary

- Both amplifiers have been successfully tested at the factory.
- They are on a boat to the US right now and will arrive sometime 2nd week in May.
- Design of circulator support structure is complete. Material is at CMTF for construction.
- Input coupler DC blocks have been constructed and tested.
- Bid process for construction and brazing of input coupler vacuum window extended to April 30. No specific estimate for completion.

RFQ Infrastructure Summary

- Water interface document between Fermi and LBNL nearly complete.
- We have wall power, water, and interlock systems ready for testing power amplifiers and circulators.
- We still don't have a clear path to a full water cooling system for RFQ operation. The current CMTF water skid doesn't have the flow capacity.
- We may need to start commissioning with low duty cycle and limited tuning capability.
- Potential x-ray hazards for CW operation will require an interlocked enclosure to power RFQ. There are plans for a temporary, shorter enclosure until half wave resonator is ready.

RFQ/RFQ Cooling System Interface
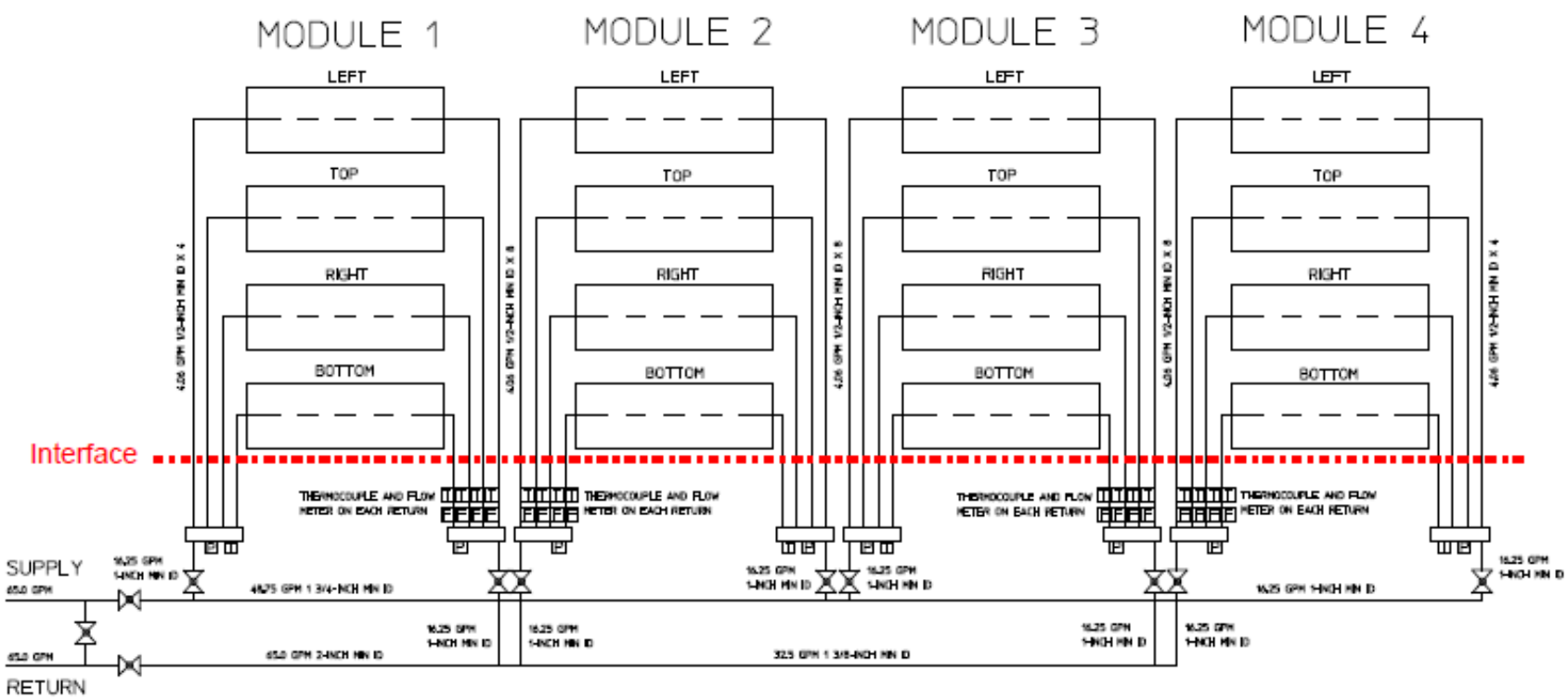
- Interface is at the RFQ body, in some cases at the single-channel level
- FNAL installs hoses up to these points