Summary of PXIE RFQ Progress at LBNL

Jim Steimel

Curt Baffes

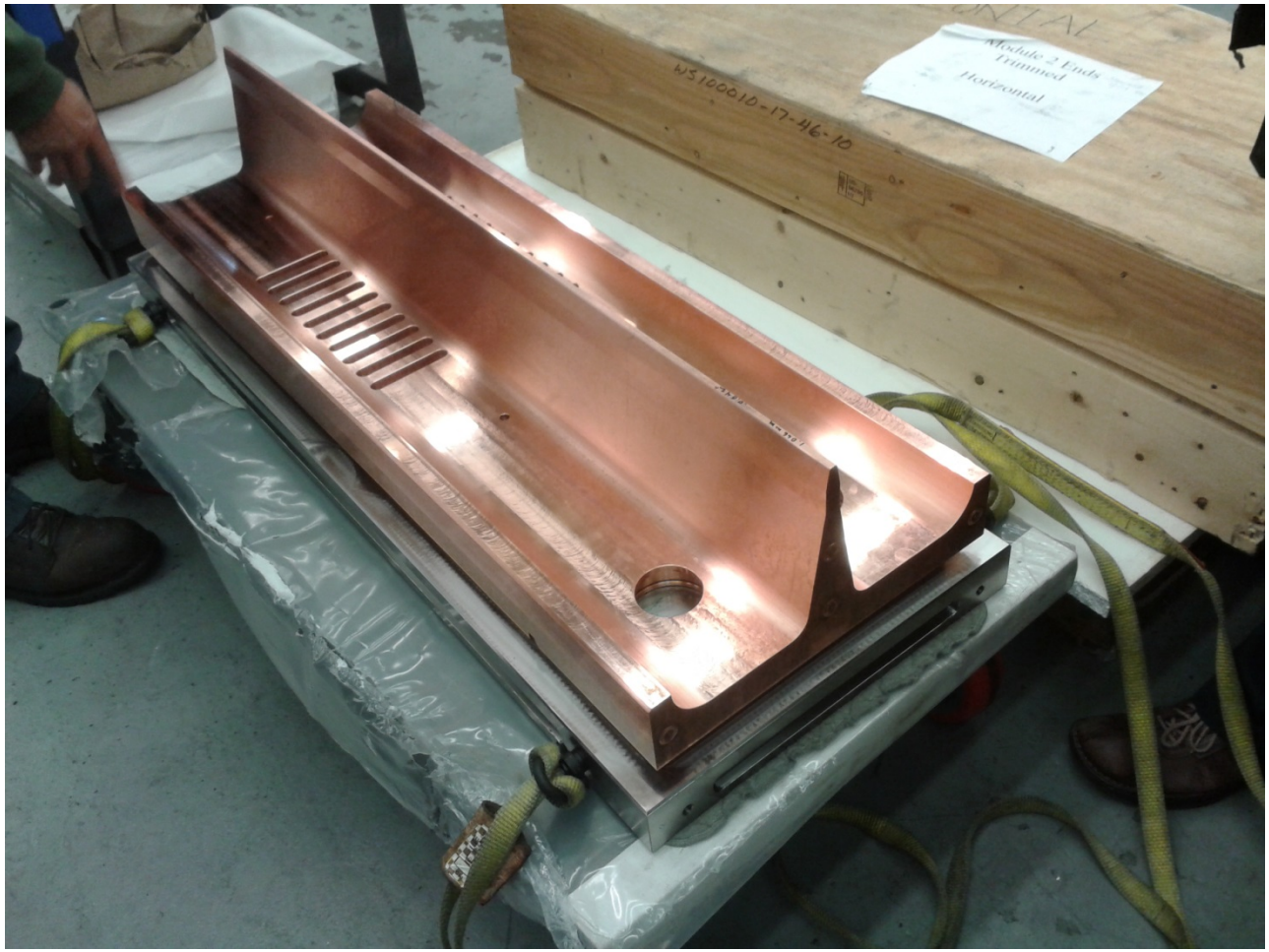

- Rough machining complete for all vanes.
- Gun drilling and e-beam welding complete for all vanes.
- E-beam welding vender certifies vacuum seal for all welds.
- Picture above shows Module 1 – horizontal vane

All cooling channels checked for continuous flow and no blockages (not a pressure check).

- Milling machine for vane profiles has been repaired.
- Machine is 40 years old and made vanes for SNS RFQ.

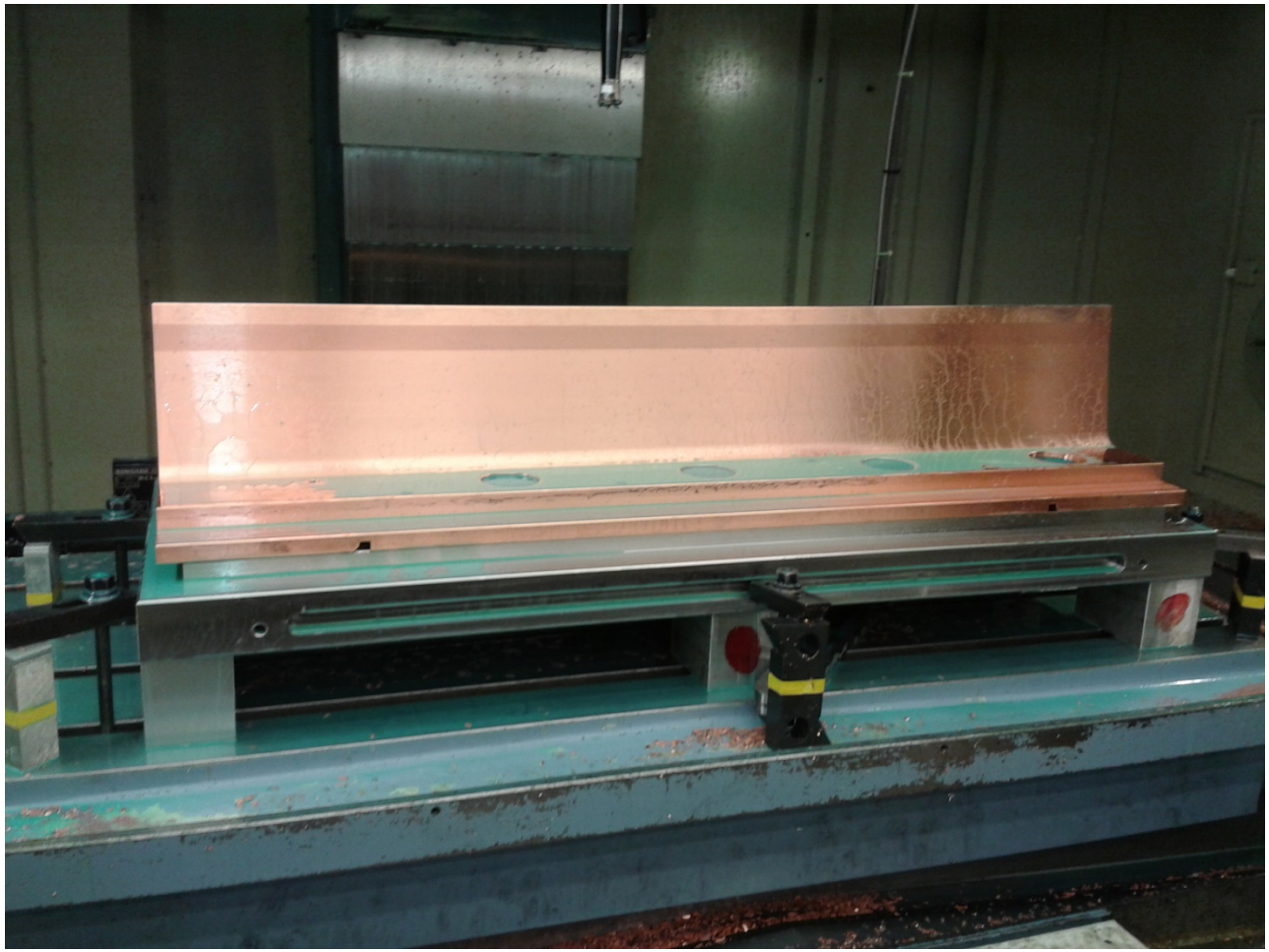

- Final machining of Module 2 has begun.
- Expect to have all Module 2 vanes machined in 4-6 weeks.
- Other modules to follow in 4-6 week increments.

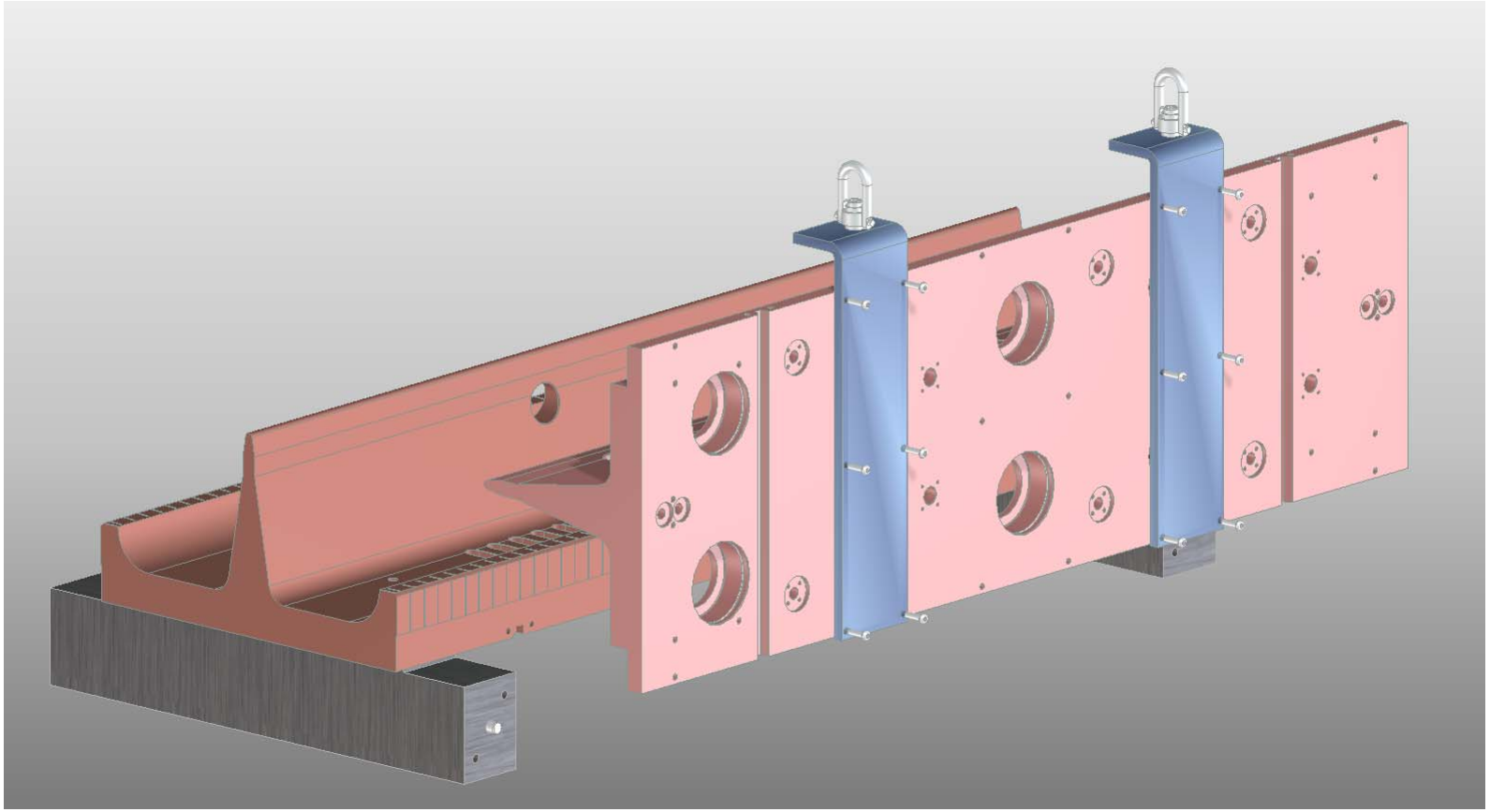

- Rendering that shows early steps of vane assembly.
- Vanes will be brought together using custom supports.

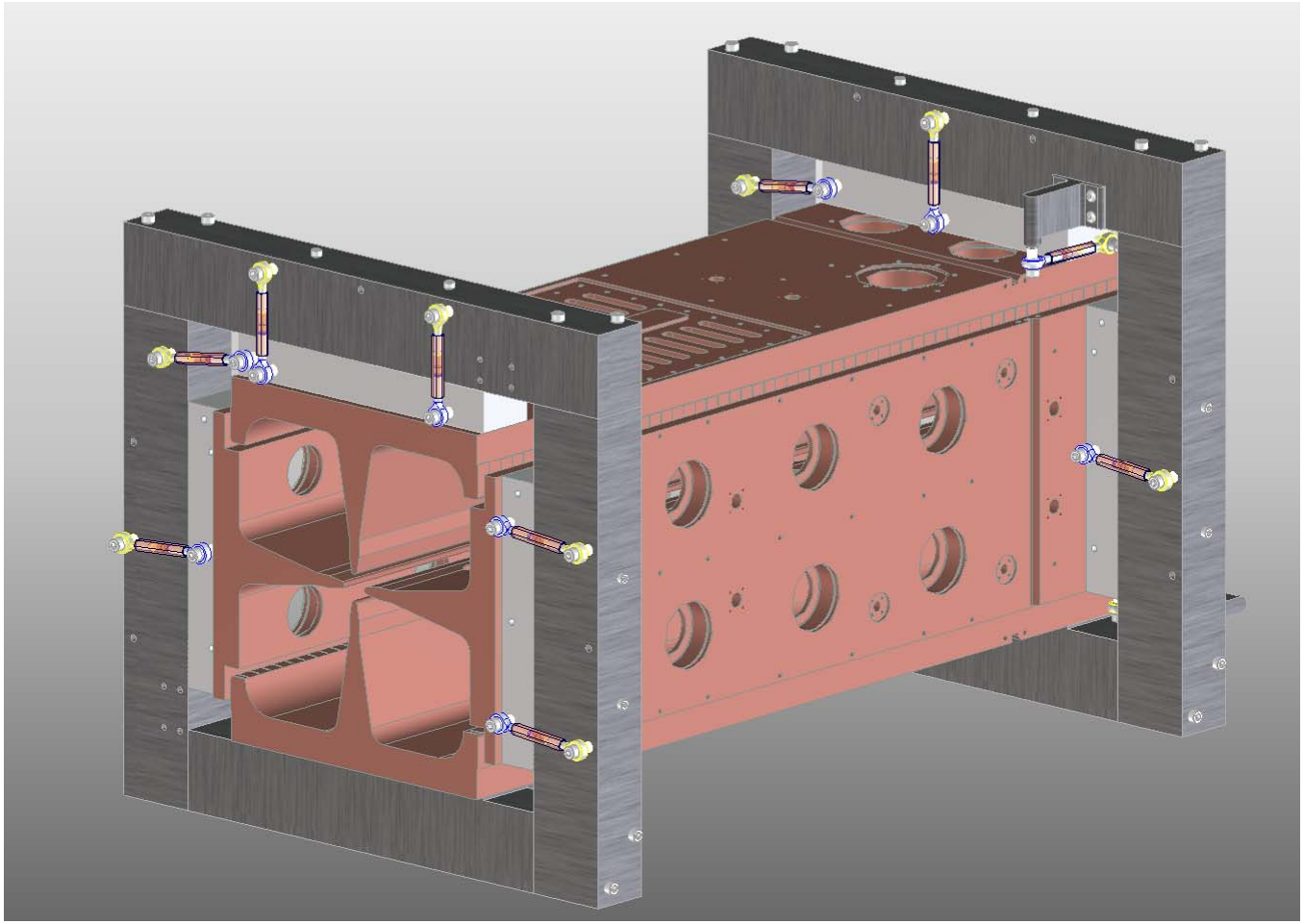

- Vane modules will be brought together using adjustable supports.
- Module 2 bead pull will take place once vanes are brought together, before brazing.
- Custom supports, temporary end plates, and temporary tuners? must be ready for bead pull.

RFQ on Support Structure

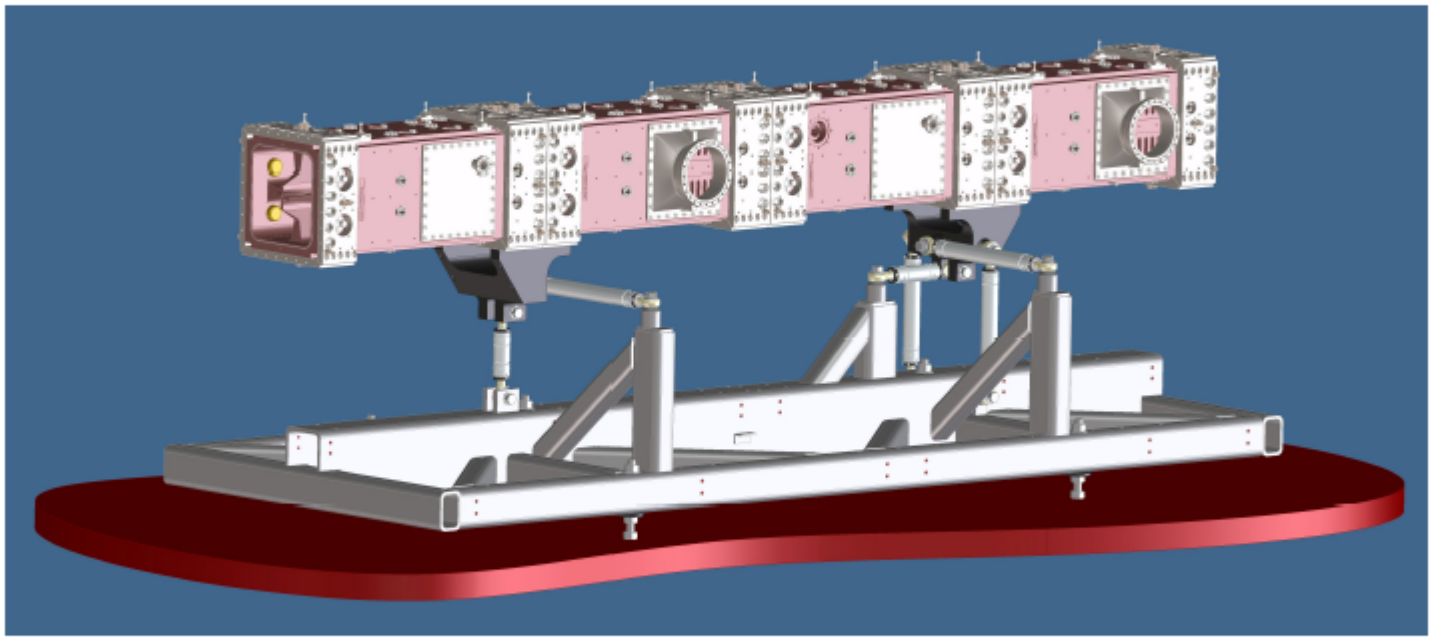

Rendering of support structure complete. Preliminary assembly plan complete.

Support Design Details

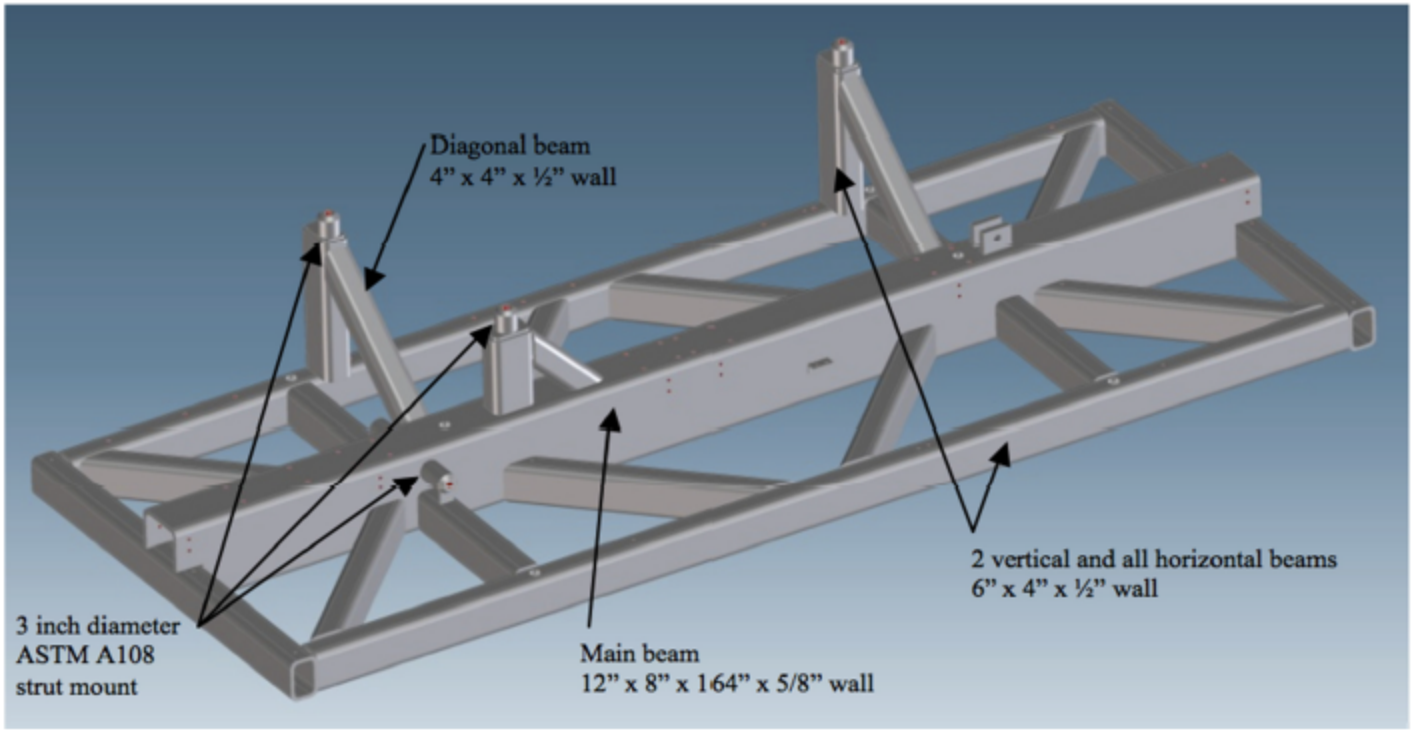

Module Rigging for Assembly

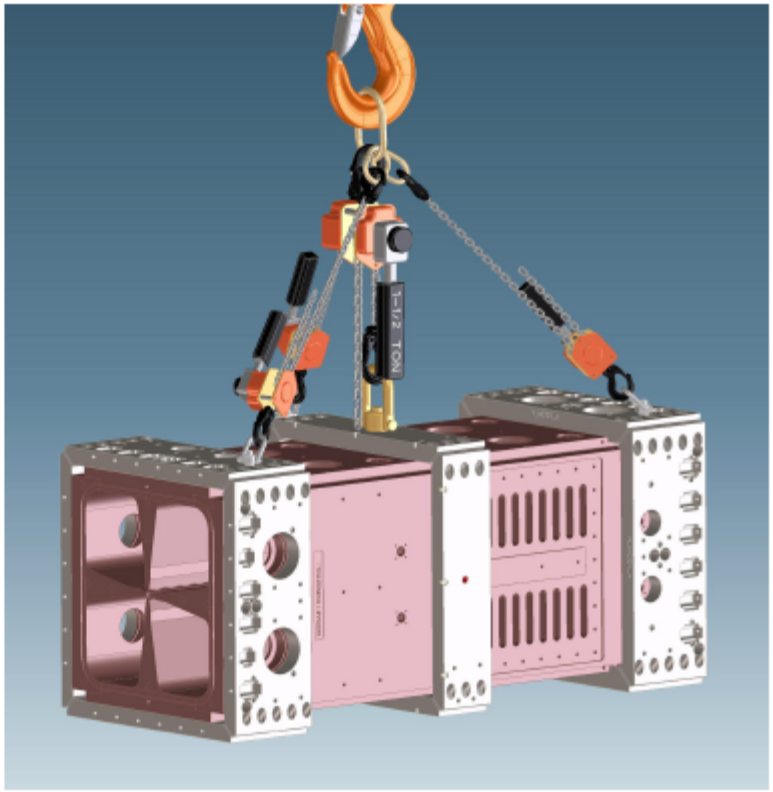

Temperature and Frequency Response

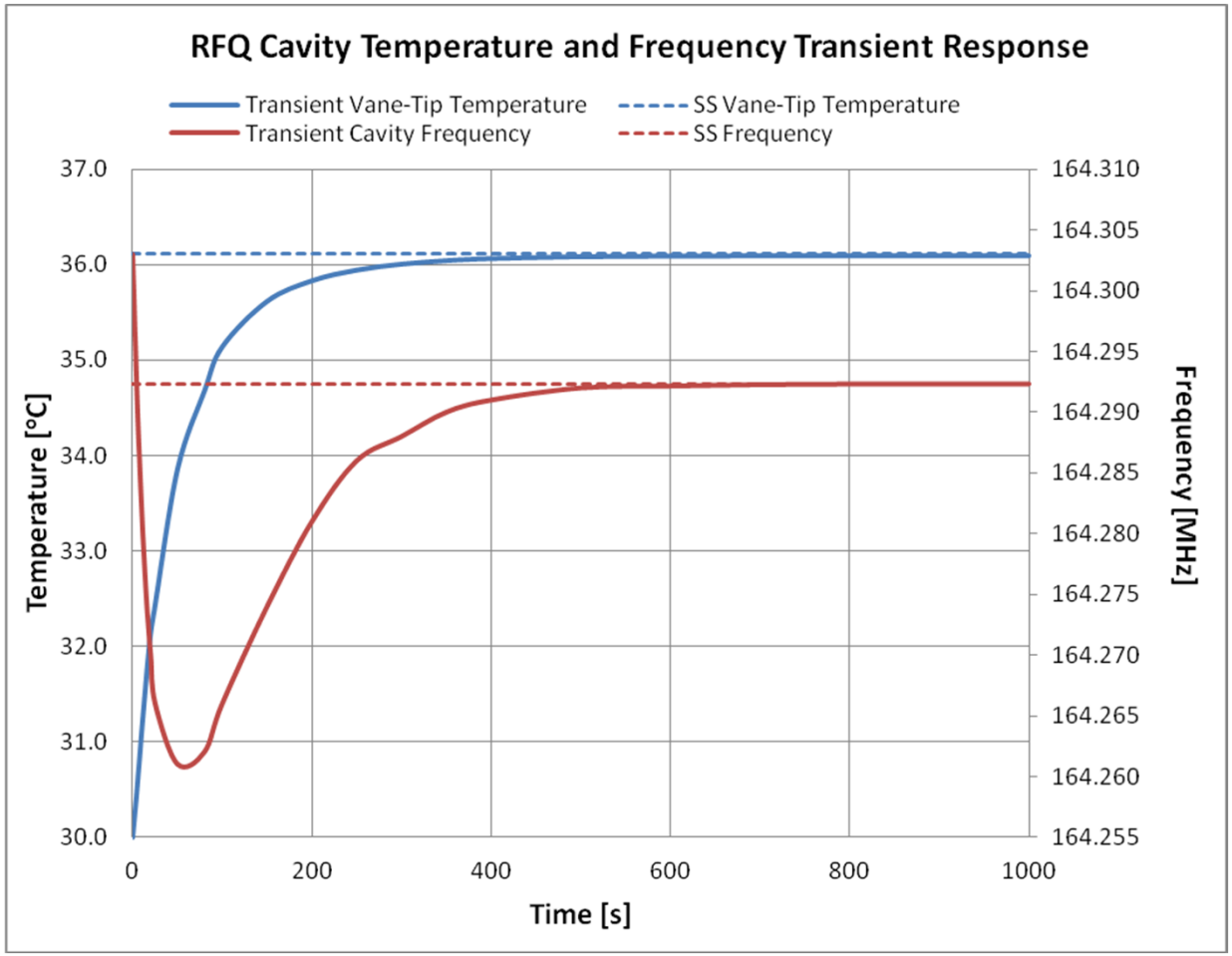

- Plot shows RFQ resonant frequency dynamic response to cold turn-on.
- It assumes nominal accelerating field maintained during process.

Discussion

- Stepped loading -> RFQ reaches steady state ~500 seconds after turn on, but produces a sharp 42 kHz drop in frequency over 1st 50-75 seconds of operation
- Ramped loading -> takes longer for RFQ to reach steady state, but decreases the frequency drop
  - 10 minutes -> 20 kHz frequency drop over first 600 seconds
  - 20 minutes -> 15 kHz frequency drop over first 1200 seconds
  - Ramping is more stable and easier to track
- I am not as concerned about turn-on as effects of RF trips. I have requested analysis of time constants associated with interruption of power.

Summary

- Module 2 vane machining making fast progress – anticipate having module 2 vanes machining complete in 4-6 weeks.
- Other modules could follow in 4-6 week increments.
- Still need to machine fixtures, clamps, and temporary tuners for bead pull measurements and final brazing.
- Support stand rendering complete including preliminary assembly plan. Work is beginning on final design drawings.
- The water flow plan is complete enough to specify flow rates and diagnostics. Resonant frequency dynamics analyses continue.