Fermilab

Managed by Fermi Research Alliance, LLC for the U.S. Department of Energy Office of Science

PXIE Operating Modes and Timing Events

Jim Steimel

PIP-II Colloquium

May 26, 2015

Duties of PXIE Timing System and Mode Control

- Dictate and communicate beam pulse pattern.
- Synchronize beam data acquisition with beam pulse.
- Provide safe beam current parameters for beam line tuning and diagnosis.
- Maintain synchronization between data samples across multiple data acquisition systems.

Beam Mode Definition Sample

- Primary purpose of mode definition is to warn operators of beam damage potential.
- Safe mode instruments can be set up quickly.
- Machine protection system will disable beam if it detects an invalid state.
- Risks and protections in “Expert” mode needs to be better understood before detailed definition is complete.

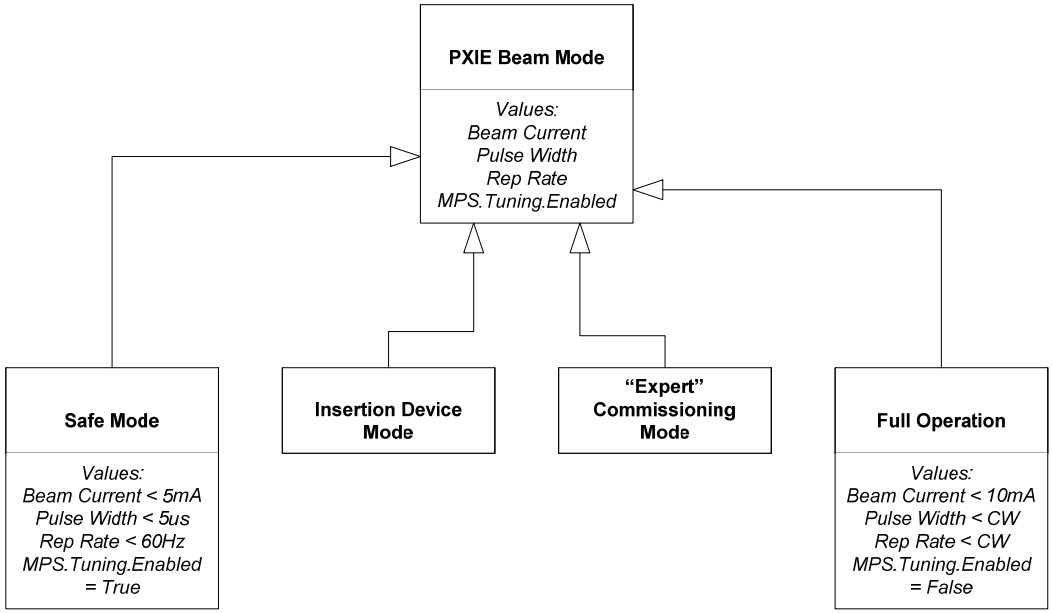

Simple Trigger Illustration

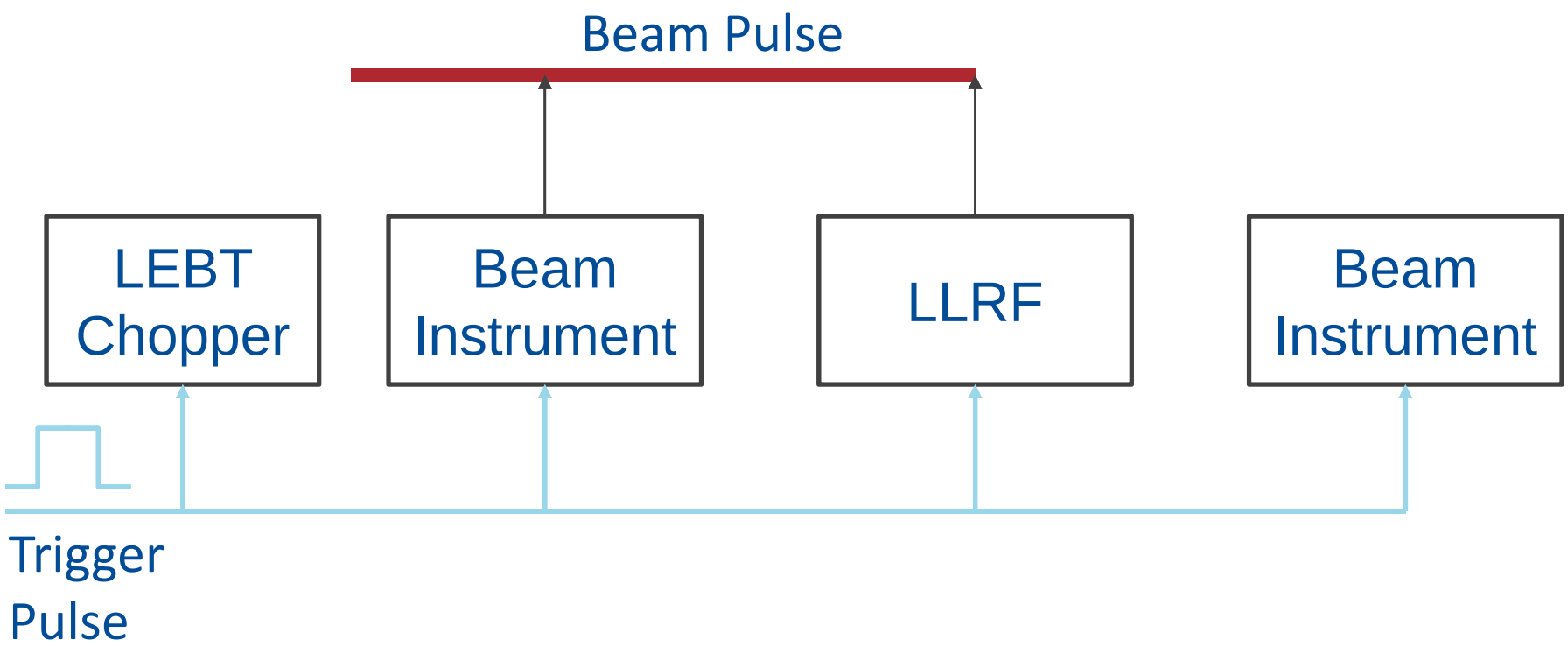

- Most devices will require synchronization with the front of the beam pulse.
- Beam instruments will want to verify beam through the pulse.
- Need to specify timing precision of pulse trigger.

Sample Data Acquisition Buffers

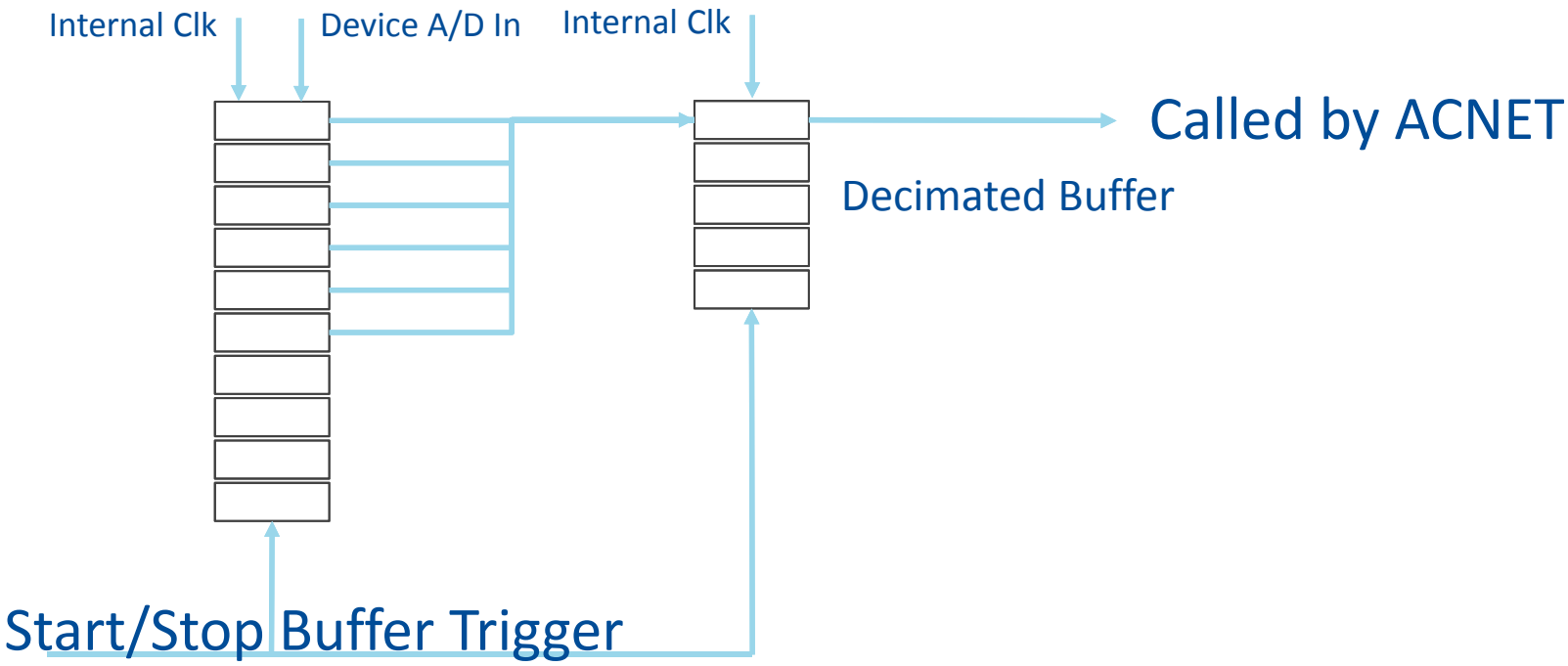

- Simplified block diagram of data acquisition buffers.
- First buffer is usually triggered at a fast sample rate.
- Data is filtered and decimated for presentation to user data requests.
- Buffer triggers may stop acquisition for external access.

Multiple Data Buffers

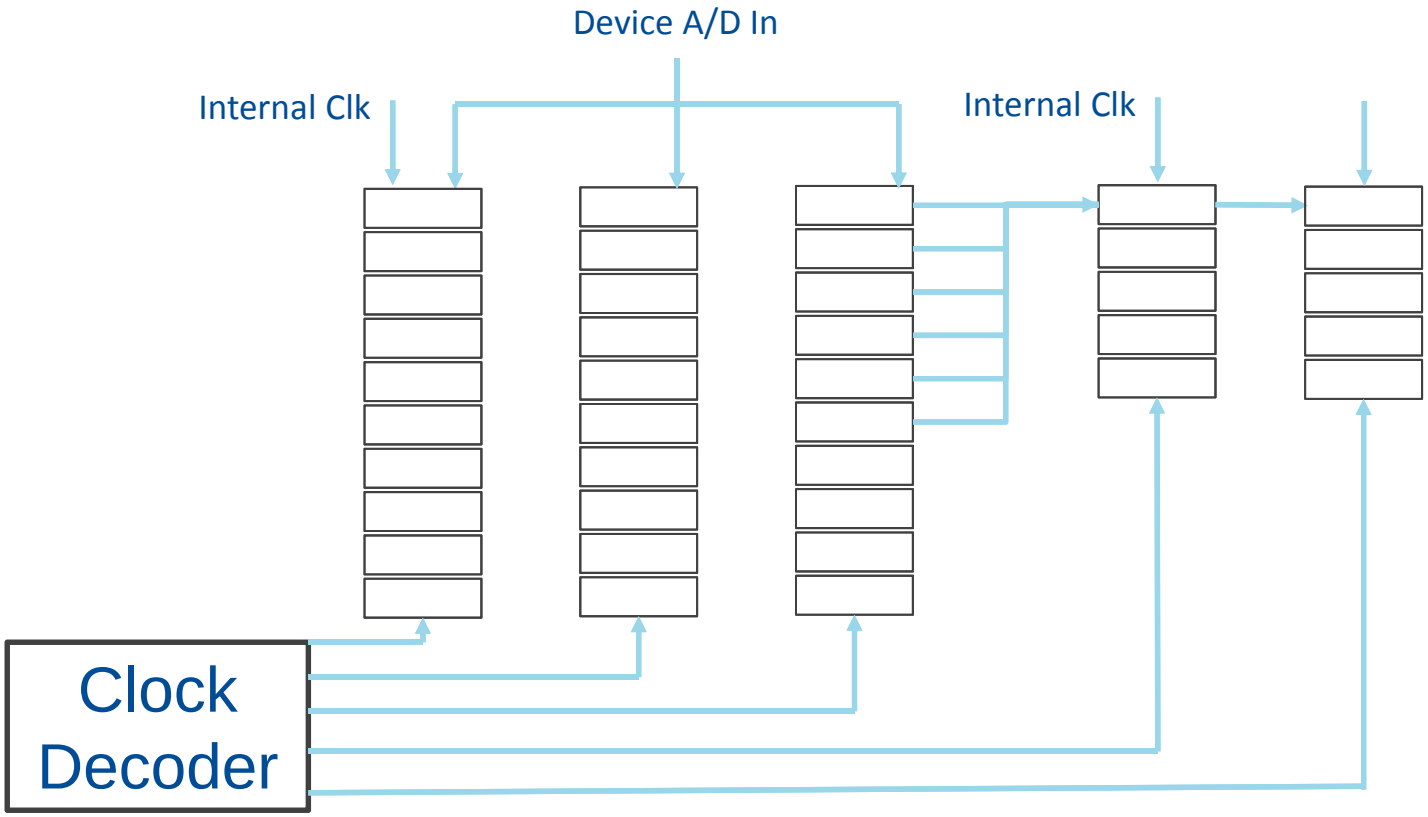

- Simplified block diagram showing multiple buffers on a front end.
- One buffer can be stopped for access while other buffers continue.

Synchronization of Different Buffers

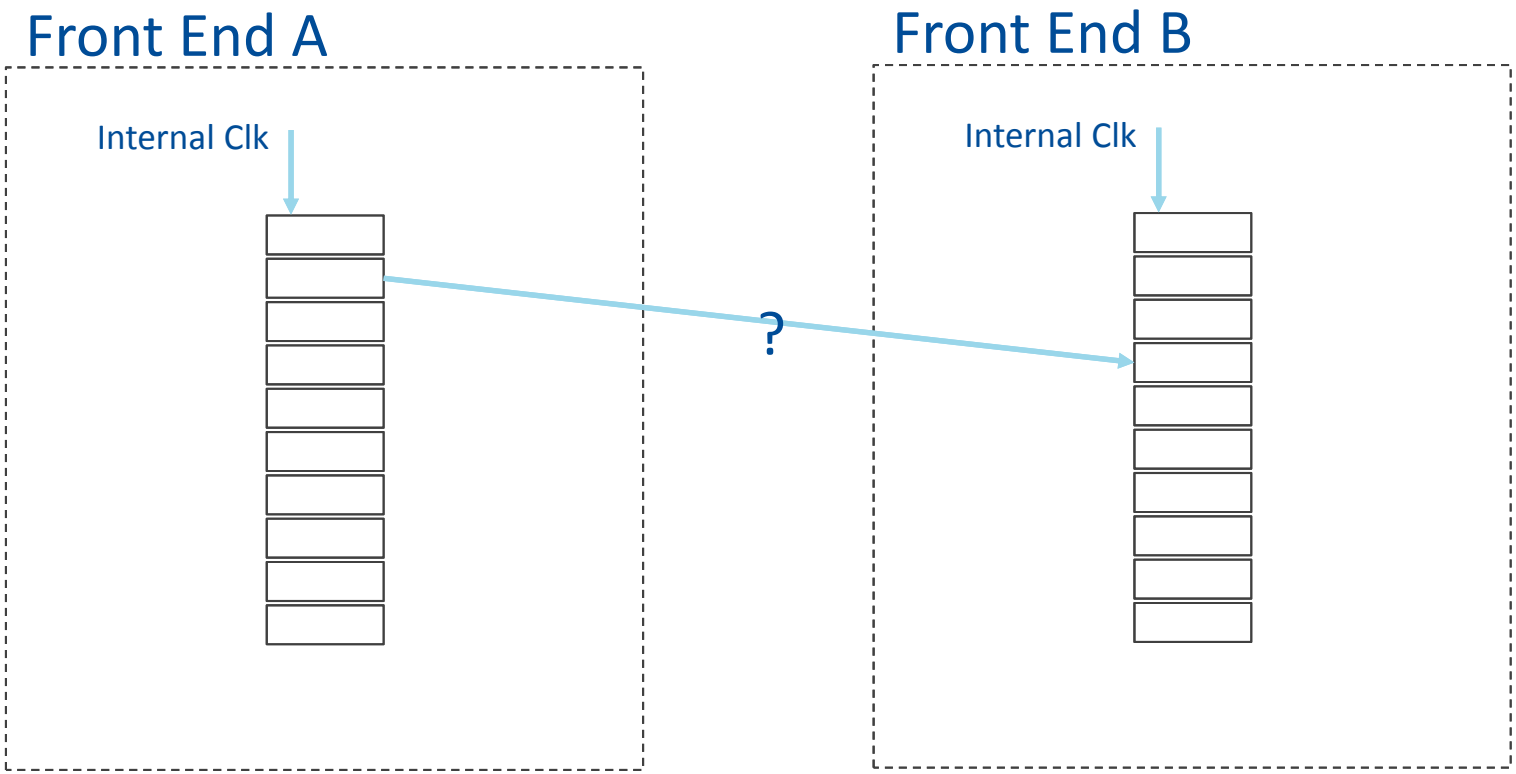

How do we re-order information between different systems?

What bandwidth of data needs to be reordered?

Distributed Clock

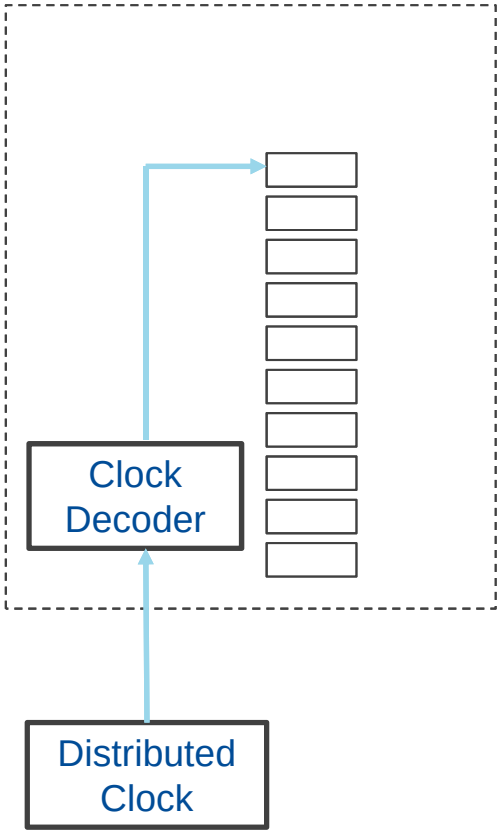

- Distributed clock can be used as reference for data acquisition sample clock.
- Distributed clock can contain data information such as changes in beam operation mode or trigger event.
- Front end can keep track of when data samples are taken relative to clock trigger events.
- How precise should we make the synchronization (i.e. 60Hz, 10 kHz, bunch-by-bunch)?
- Controls department has already done prototype testing of XCLK, a 1.3 Gb/s, distributed clock event system.

Necessary (but not sufficient) Beam Modes and Trigger Events

- Beam Modes:
  - Beam Disabled – possibly in response to machine protection (MPS) or safety system.
  - Safe – low enough intensity to avoid damage to any beam line component but high enough to see on instruments.
  - Full Operation – highest possible intensity operation, very limited tuning allowed.
- Trigger Events:
  - Start of Beam Pulse – prepare acquisition and control systems for impending beam current pulse.
  - Stop Acquisition Buffer – possibly triggered by MPS to diagnose trip.

Can we create user defined trigger conditions outside the MPS infrastructure?