Fermilab

Managed by Fermi Research Alliance, LLC for the U.S. Department of Energy Office of Science

Cold BPM for PIP-II Linac

Andrei Lunin

22 February 2016

BPM Simulation with CST Particle Studio

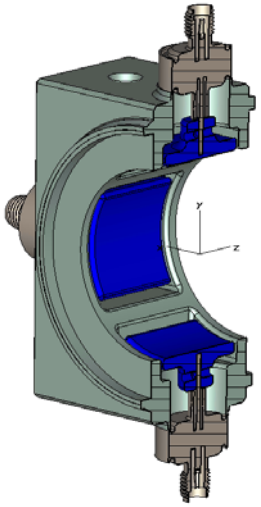

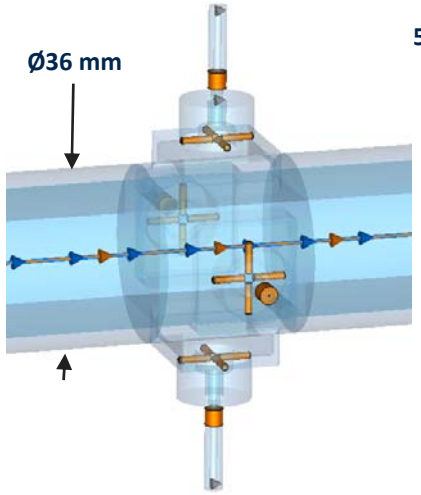

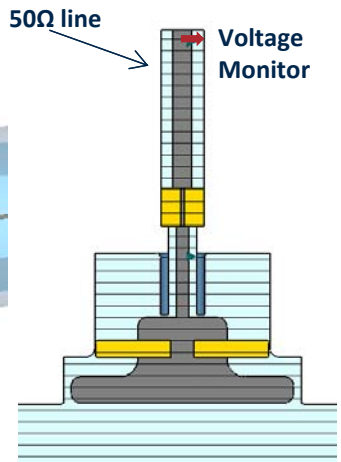

Instant Electric Field induced by the 4 mm bunch (β =1)

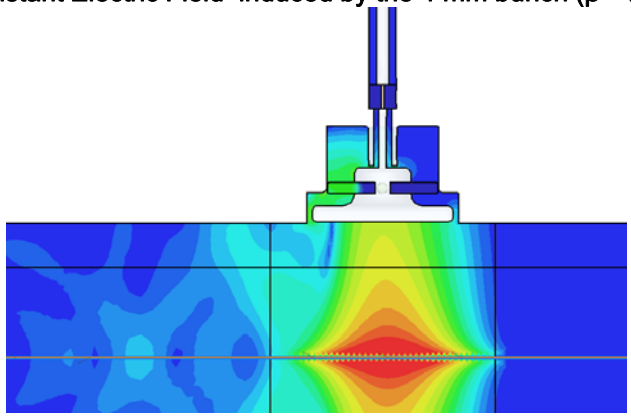

BPM signals produced by the 4 mm rms bunch

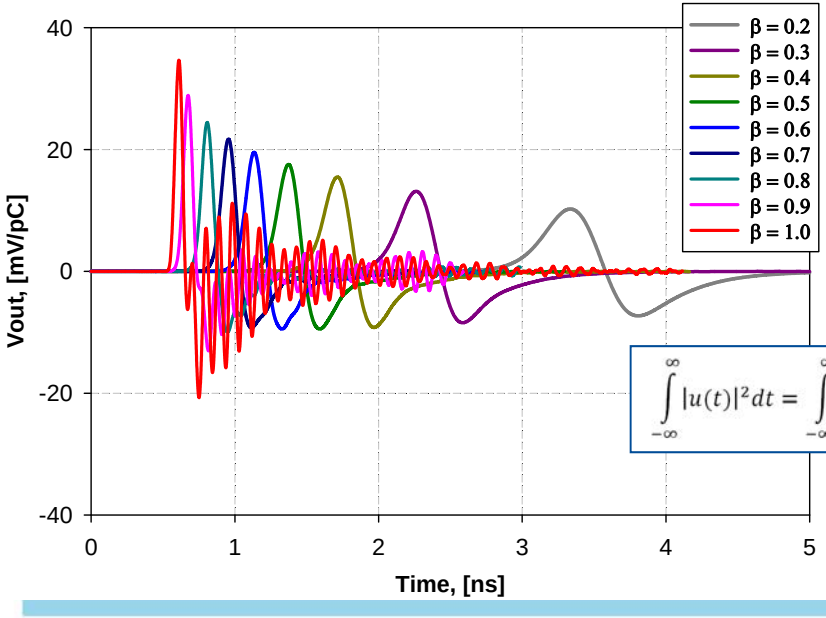

$$\int_{-\infty}^{\infty} |u(t)|^2 dt = \int_{-\infty}^{\infty} |U(\omega)|^2 d\omega$$

BPM signals spectral densities for various bunch lengths

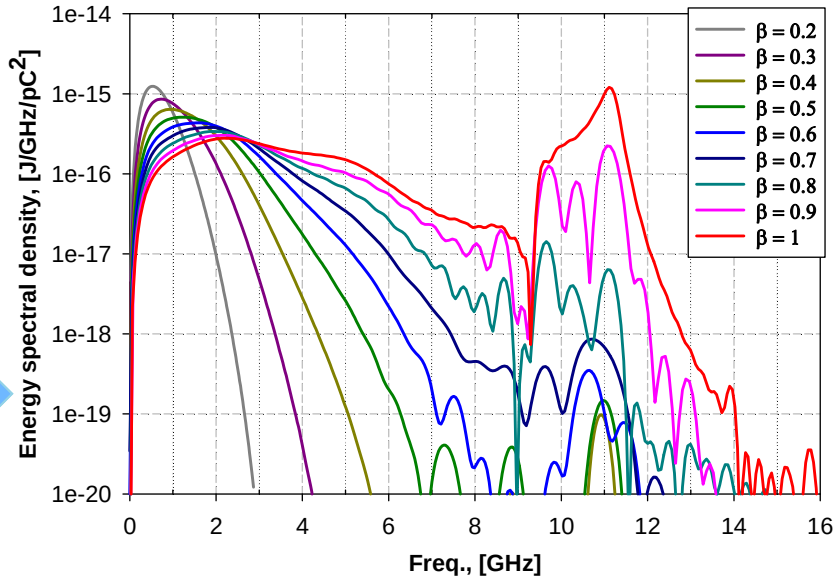

BPM Output Signals

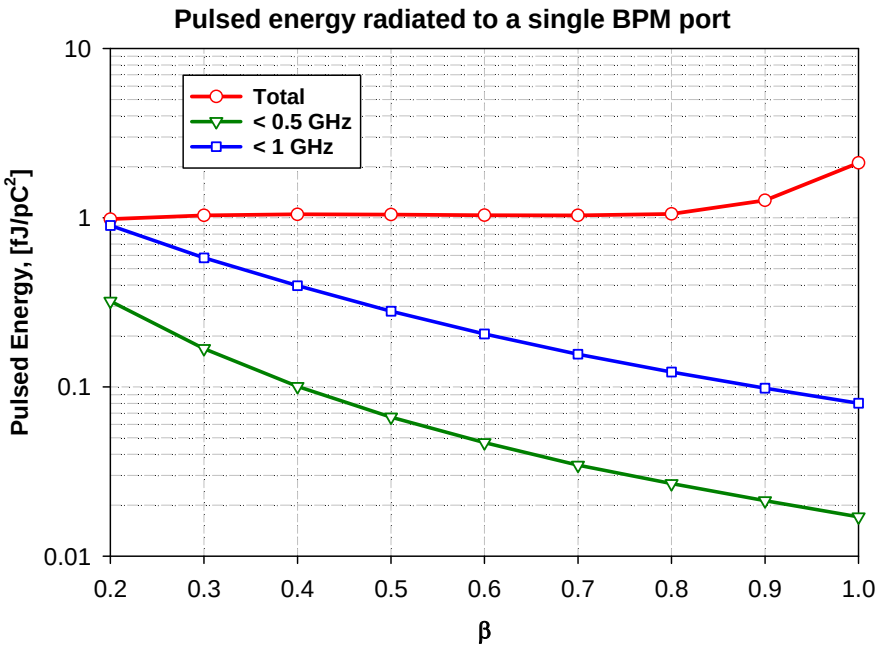

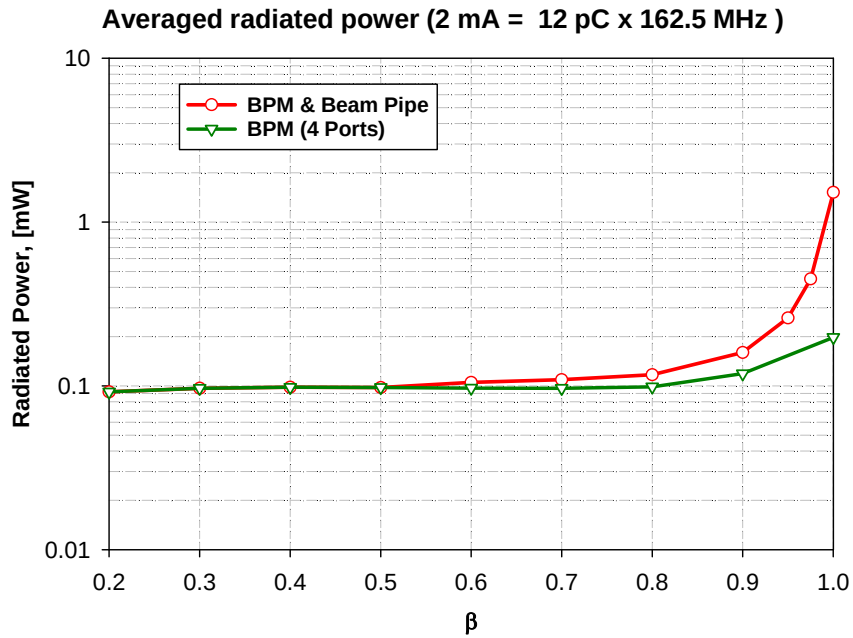

BPM Type	Pulsed Energy*, [fJ]		Expected Resolution at 1 GHz*, [μm]	Radiated RF Power (single port, 2 mA) [mW]
	0 .. 0.5 GHz	0 .. 1.0 GHz		
ANL Square 20 mm Button	>2 (at pickup)	>10 (at pickup)	~ ???	0.025
	>1 (end of cable)	>5 (end of cable)		

* Single port & 12 pC bunch & 10m cable (~ 0.3 dB/m at 1GHz)

1. BPM performance with signal processing scheme (downmix&digitize) has to be verified

ANL Button BPM Ports Cross Coupling

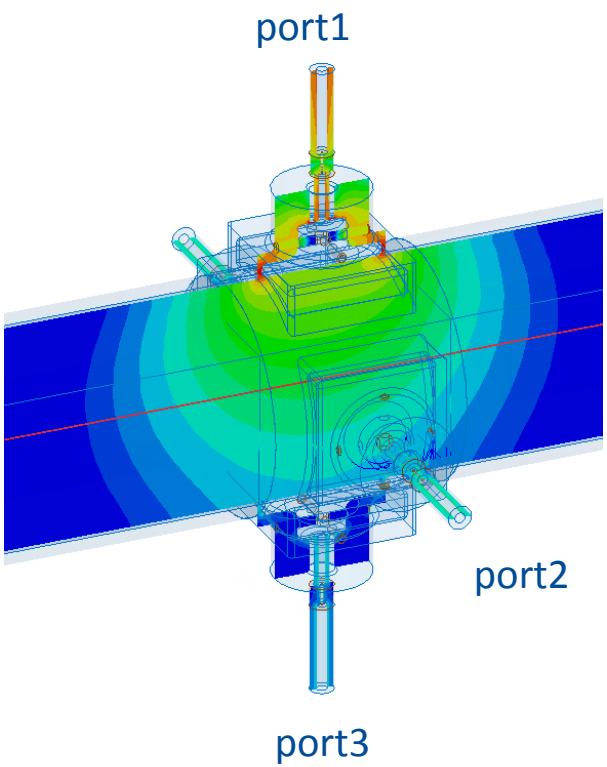

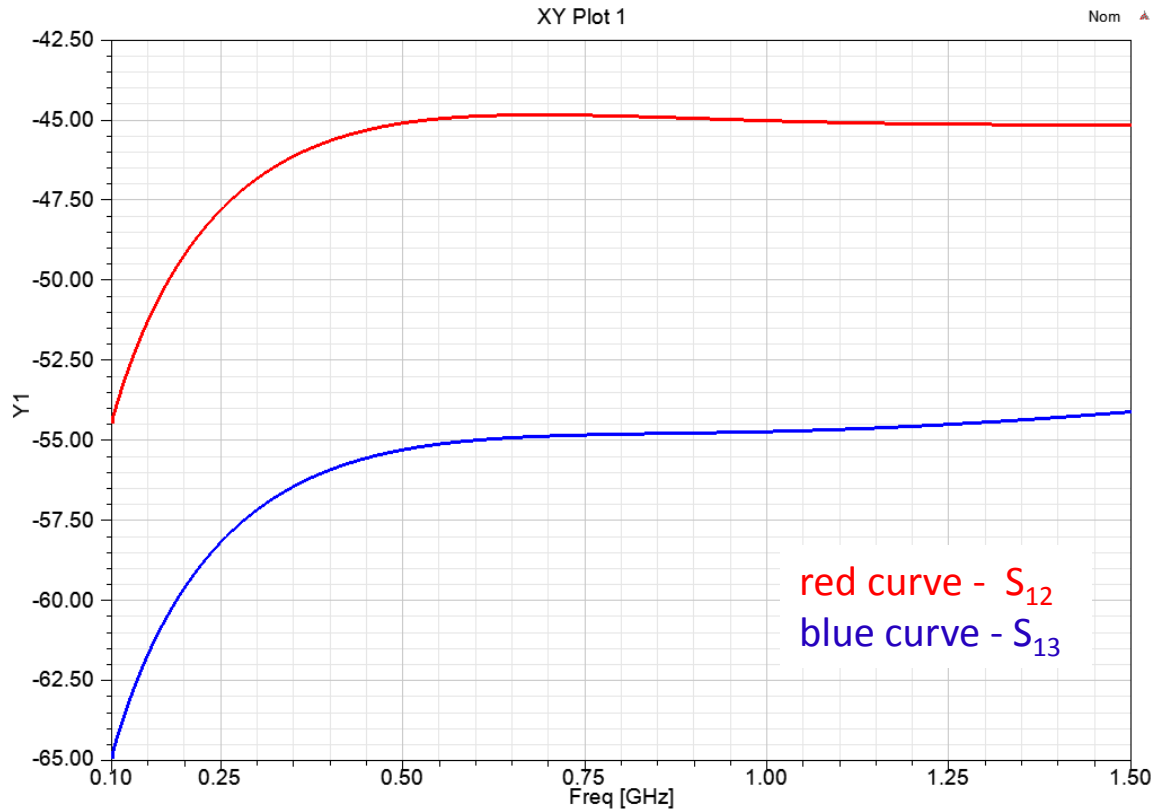

The ANL Button BPM X&Y ports cross coupling is ~ -45 dB