Fermilab

Managed by Fermi Research Alliance, LLC for the U.S. Department of Energy Office of Science

Current Status of PIP-II Resonance Control

W. Schappert

Outline

- Importance of Resonance Control for PIP-II
- History of Resonance Control at FNAL
- Current Program for PIP-II
- Conclusion

SRF Cavity Detuning

- SRF cavity cells often formed from thin (2-4mm) sheets of pure niobium to allow them to be cooled below superconducting transition temperature
  - Thin walls make cavities susceptible to detuning from vibration
  - Detuned cavities require more RF power to maintain accelerating gradient
  - Providing sufficient RF reserve power to overcome cavity detuning increases both capital and operational cost of machine

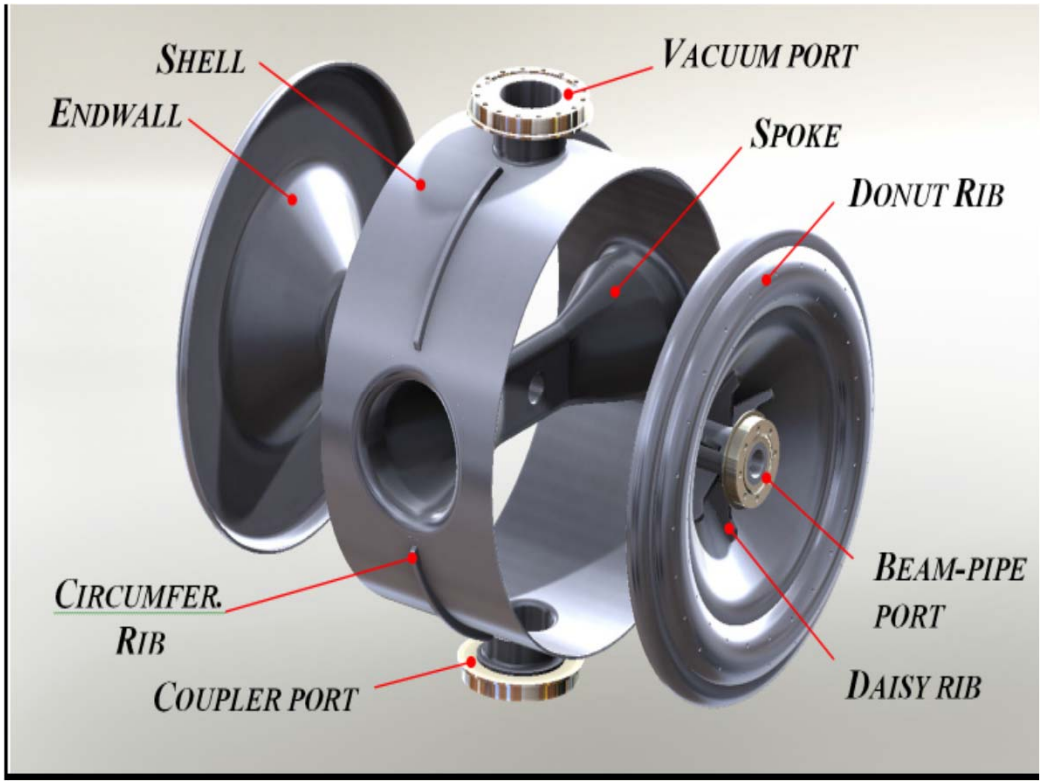

- Controlling cavity detuning critical for current generation of machines, (LCLS-II, PIP-II, ERLs, etc.) that employ very narrow bandwidth cavities
  - For machines with very narrow bandwidth cavities, e.g. ERLs, detuning can be the major cost driver for the entire machine

Cost of Cavity Detuning

- Detuned cavities require more RF power to maintain constant gradient
- PEAK detuning drives the RF costs
  - Beam will be lost if RF reserve is insufficient to overcome PEAK detuning
  - Providing sufficient reserve increases both the capital cost of the RF plant and the operating cost of the machine

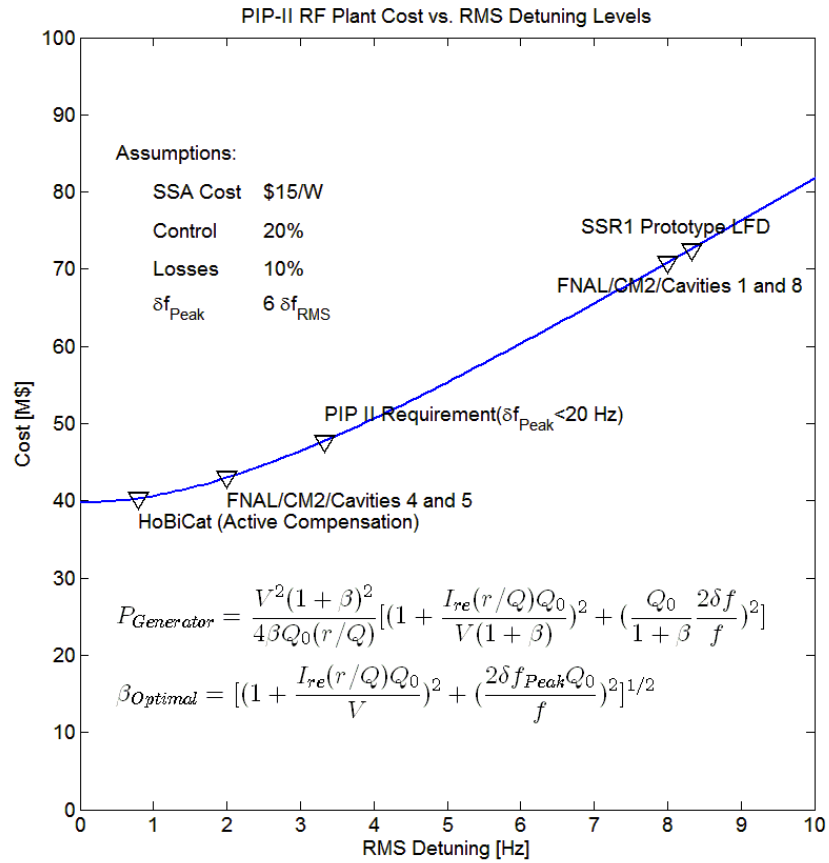

Challenge of Detuning Control

Maury Tigner ERL2015

R&D for mitigation

•Large scale-up risks need mitigation by excellent, full scale, machine modeling including realistic error distributions derived from real hardware prototypes and putative specifications

•Phase and amplitude control challenges are multidimensional here we mention only one i.e. vibration induced detuning of the very high Q cavities. Successful mitigation will require great attention to the vibration source(s) and design of the cryomodules for favorable transfer functions - source to cavity. Enough prototypes needed to assure robustness of design. RF and beam measurements in R&D loop can both help.

https://indico.bnl.gov/getFile.py/access?contribId=1&sessionId=2&resId=0&materialId=slides&confId=909

Controlling Cavity Detuning

- Cavities may be detuned by either deterministic sources or non-deterministic sources
  - Deterministic sources include
    - Radiation pressure on cavity walls (Lorentz Force)
  - Non-deterministic sources include
    - Cavity vibrations driven by external noise sources
    - Helium pressure fluctuations
- Cavity detuning can be controlled using either passive or active measures
  - Passive measures include
    - Suppressing external vibration sources
    - Reducing cavity sensitivity to sources of detuning, e.g. df/dP, LFD,…
  - Active measures include
    - Sensing cavity detuning in real-time and using piezo or other actuators to actively cancel detuning
      - Deterministic sources may be cancelled using feed-forward
      - Non-deterministic sources require feed-back

Detuning in the PIP-II Cavities

- PIP-II design calls for narrow bandwidth (f1/2 ≅30 Hz) cavities operating in pulsed mode
  - Narrow bandwidth makes cavities susceptible to vibration induced detuning
  - Pulsed mode LFD can excite vibrations
- PEAK detuning of PIP-II cavities must be limited to 20 Hz or less
  - PIP-II cavities will require active detuning compensation of both LFD and microphonics during routine operation
    - Will require combination of
      - best LFD compensation achieved to date
      - AND best active microphonics compensation achieved to date
      - AND 24/7 operation over hundreds of cavities for several tens of years
- No examples of large machines that require active detuning control during routine operation currently exist

	N	f	Q_0	r/Q	E	$L_{Effective}$	Voltage	Current	Control	Losses	P_{Beam}
		MHz	10^9	Ω	MV/m	m	MV	mA	%	%	kW
HWR	8	162.5	5.0	275	9.7	0.21	2.01	2	20	10	4.02
SSR1	16	325	6.0	242	10.0	0.21	2.05	2	20	10	4.10
SSR2	35	325	8.0	296	11.4	0.44	4.99	2	20	10	9.99
LB650	33	650	15.0	375	15.9	0.75	11.86	2	20	10	23.72
HB650	24	650	20.0	609	17.8	1.12	19.92	2	20	10	39.84

Detuning Control Program for PIP-II (March 2015)

- Demonstration of feasibility is current focus
- Focus must shift at some point to engineering a robust integrated electro-mechanical control system
- Reliable operation can only be ensured by extensive program of testing of both components and integrated system

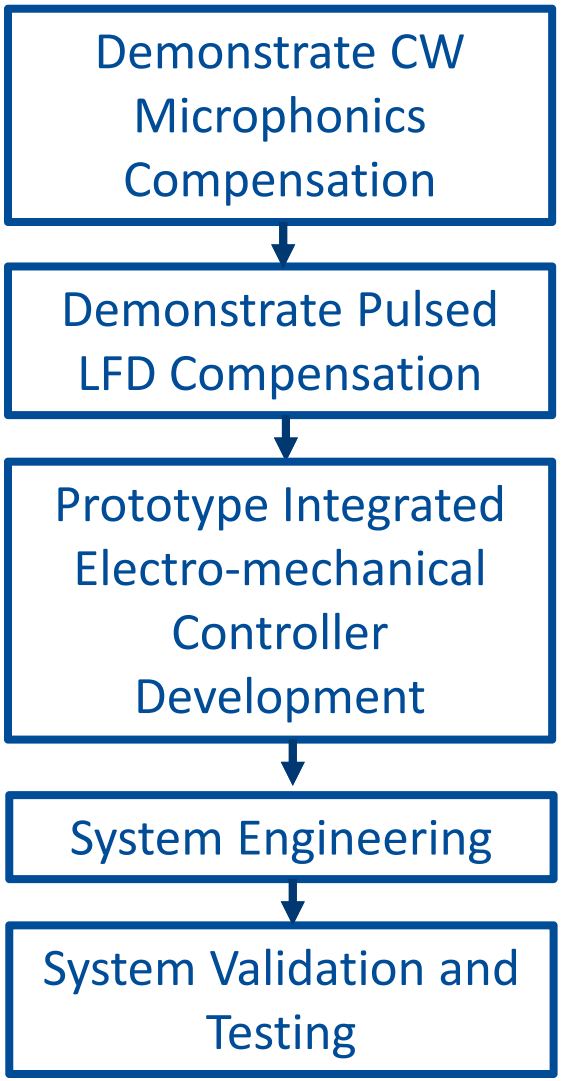

Conclusions (March 2015)

- Controlling cavity detuning will be critical for successful operation of PIP-II because of narrow cavity bandwidths ($f_{1/2}$~ 30 Hz)
  - Narrow bandwidths would be challenging even with CW operation alone
  - Pulsed mode operation brings significant additional complications
- All possible passive measures must be exploited but active control will still be required
  - Will require both best LFD and best microphonics compensation achieved to date operating reliably over many cavities and many years
    - Early test results provide reason for CAUTIOUS optimism
  - There are no existing examples of large machines that require active control of detuning during routine operation
  - Cross-disciplinary challenges may be more difficult to solve than technical challenges (which are still considerable)
    - Minimizing cavity detuning requires optimization of entire machine
    - Will require active coordination across divisions and across disciplines

Cross-disciplinary Challenges (March 2015)

- Minimizing cavity detuning requires careful optimization across entire machine
  - Cavity design, cryomodule design, RF plant, cryogenic system design, civil engineering
    - Cross-disciplinary challenges may be more daunting than technical challenges

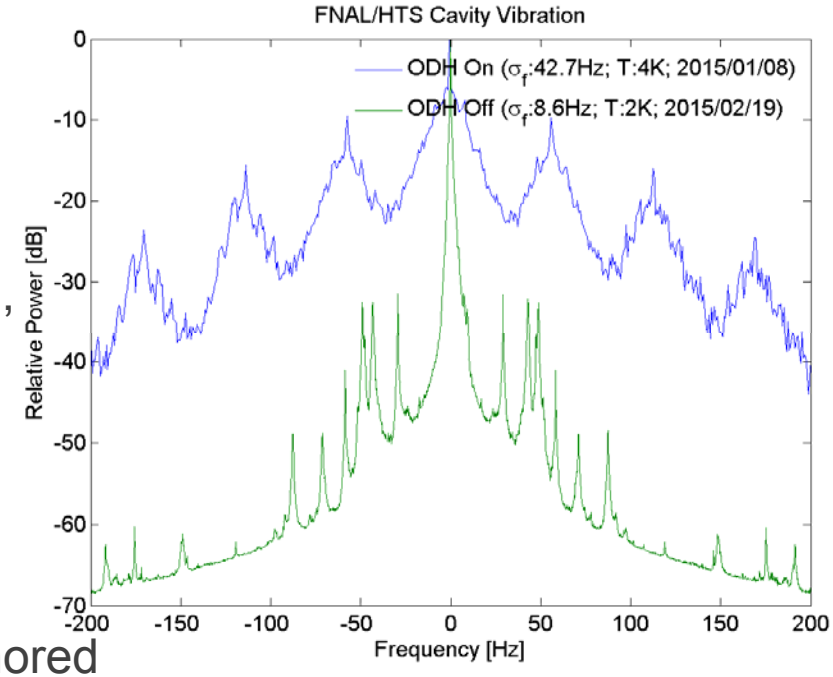

- Large potential costs if any aspect ignored
  - Small design changes may have large impact on cavity detuning
  - Cost of fixing microphonics afterwards could be very high
- Some structure within PIP-II organization will be required to coordinate effort amongst groups and disciplines
  - Education and communication
  - Vibration related reviews

History of Resonance Control at FNAL

- CKM Cavities
- Adaptive Feedforward LFD Control at FNAL
- S1G Cryomodule Tests at KEK
- Microphonics Control in First SSR1 prototype
- Systematic Errors in Quality Factor Measurements
- Precision RF-Based Quality Factor Measurements
- Microphonics Control in the Current SSR1 Prototype

Microphonics Suppression in the CKM Cavities

- Some of the earliest work on active microphonics suppression was done here for the 3.9 GHz CKM cavities in 2001
- 20dB suppression of individual resonance lines

11th Workshop on RF-Superconductivity SRF 2003 FERMILAB-Conf-03/315-E

MICROPHONICS DETUNING COMPENSATION IN 3.9 GHz SUPERCONDUCTING RF CAVITIES*

R. Carcagno#, L. Bellantoni, T. Berenc, H. Edwards, D. Orris, A. Rowe
Fermi National Accelerator Lab, Batavia, IL 60510, USA

Abstract

Mechanical vibrations can detune superconducting radio frequency (SCRF) cavities unless a tuning mechanism counteracting the vibrations is present. Due to their narrow operating bandwidth and demanding mechanical structure, the 13-cell 3.9GHz SCRF cavities for the Charged Kaons at Main Injector (CKM) experiment at Fermilab are especially susceptible to this microphonic phenomena. We present early results correlating RF frequency detuning with cavity vibration measurements for CKM cavities; initial detuning compensation results with piezoelectric actuators are also presented.

INTRODUCTION

Details of the CKM experiment can be found in [1]. The current 3.9 GHz cavity design specification calls for a 65 Hz full loaded bandwidth. To minimize RF control efforts and power, an initial detuning tolerance target of 1/10 of the bandwidth, or ±6.5 Hz, was established; this corresponds to ±3.1 mm in cavity length.

Piezoelectric actuators were successfully used for compensation of Lorentz force detuning on TESLA cavities [2]. In this work, we study the feasibility of piezoelectric actuators for compensation of microphonics detuning on CKM cavities.

Microphonics detuning compensation studies were performed on a 3-cell prototype CKM cavity at 1.8 K and on a full 13-cell prototype CKM cavity at room temperature. Automatic detuning compensation was accomplished using an adaptive feed forward control method based on the Least Mean Squares (LMS) algorithm [3].

COMPENSATION AT 1.8 K

The 1.8 K test on a 3-cell CKM prototype cavity took place in a vertical Dewar located near large vacuum pumps. Microphonics detuning was severe for this setup due to the lack of vibration isolation between the test stand and the vibration sources.

The piezo actuator was used in the test setup as both a vibration sensor and compensating actuator. The piezo actuator was installed so as to couple to vibrations of the cavity end flanges relative to each other. The cavity operated under continuous RF power.

*Work supported by the U.S. Department of Energy under Contract No. DE-AC02-76CH03000
ruben@fnal.gov

Microphonics Spectrum

Figure 1 shows a measurement of the microphonics spectrum, with the cryogenic pumps on and off.

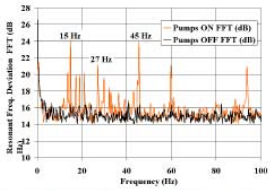

Figure 1: Microphonics spectrum with cryogenic pumps on and off.

The microphonics spectrum was not stable, but it remained more or less steady for periods of several minutes to hours.

Manual Microphonics Detuning Compensation

In one instance, at a time when the spectrum showed a single dominant frequency near 30 Hz, we attempted manual detuning compensation. We adjusted the piezo actuator drive signal frequency, amplitude, and phase until a decrease in the resonant frequency deviation amplitude was observed. Figure 2 shows the resonant frequency deviation amplitude was reduced by more than a factor of three.

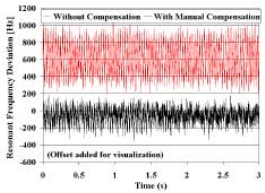

Figure 2: Manual Detuning Compensation at 1.8 K

Adaptive Feedforward LFD Control in ILC Type Cavities

- Standard approach (DESY)
  - Half cycle sin wave prior to RF pulse
    - Non-linear optimization
- Adaptive LFD (FNAL)
  - Characterize cavity with series of ms piezo pulses at different delays with respect to the RF
  - Compensation waveform constructed from LINEAR combination of training pulses

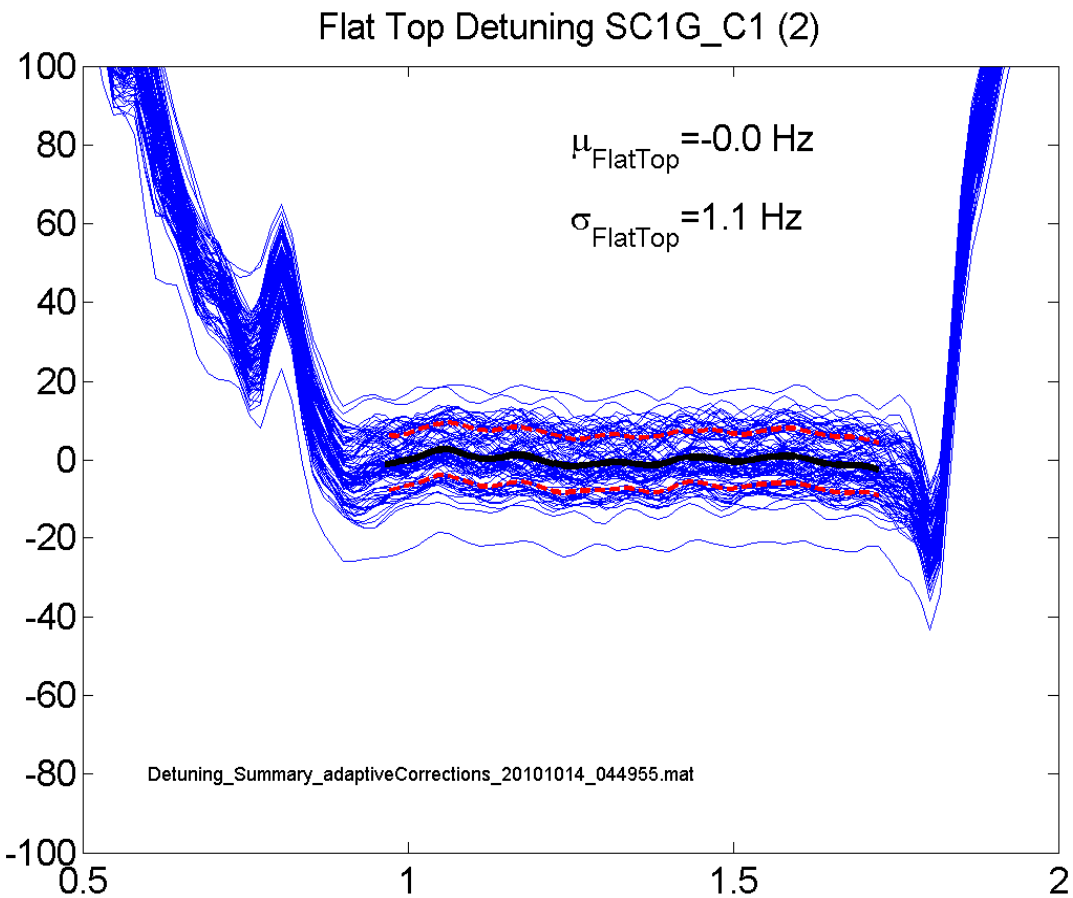

S1G Cryomodule Tests at KEK

- Comparing the performance of four distinctly different cavity/tuner designs was one of the main goals of the S1G cryomodule test at KEK
- Adaptive compensation able to control LFD to better than ILC specifications in ALL 4 cavity/tuner designs tested

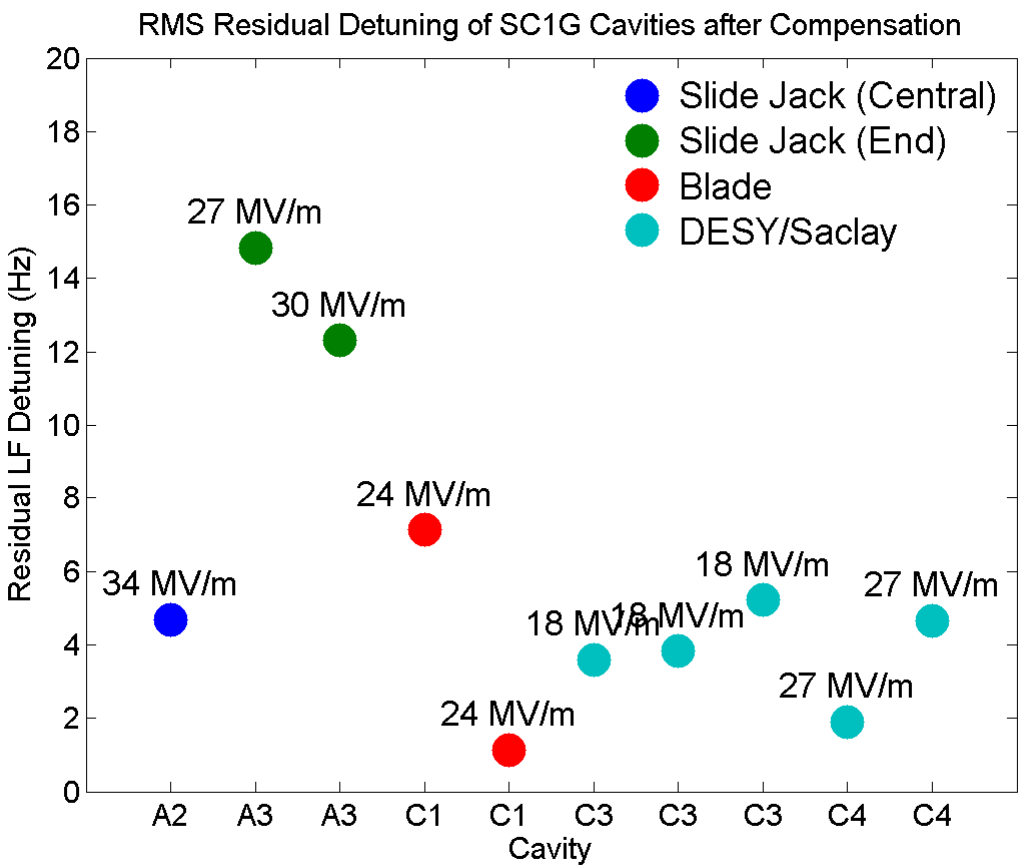

Microphonics Control in the First SSR1 Prototype

- High suppression of microphonics in CW measurements at low gradient
- STC shutdown for upgrade to operation at 2K in summer 2012
  - Not back online until 2014

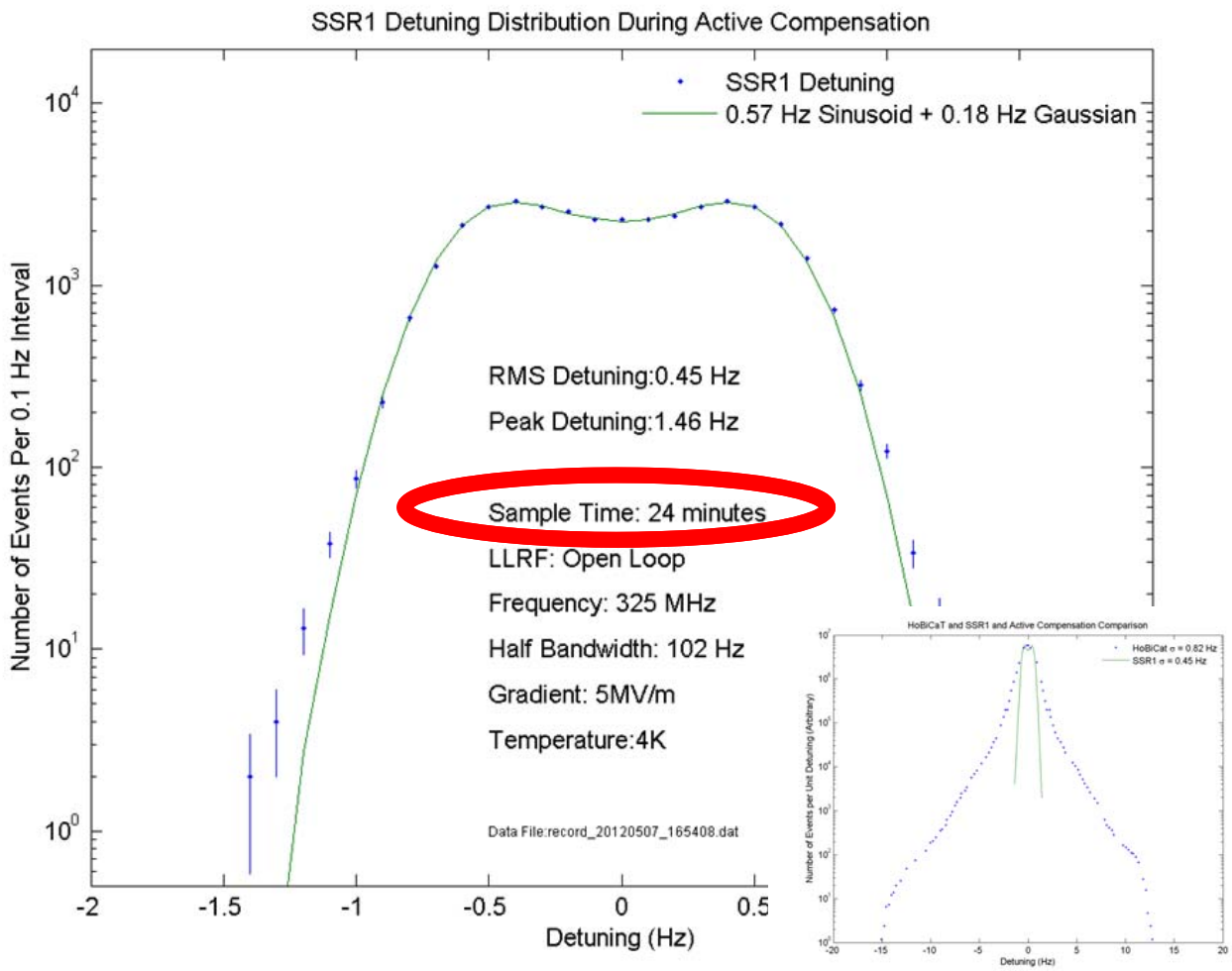

Systematic Errors in Cavity Quality Factor Measurements

- VTS Coordinator concerned that systematic errors in cavity quality factor measurements in cavity quality factor measurements not well understood
- Microphonics digital I/Q RF control system and phase shifters used to understand systematic effects associated with circulator and directional couplers
- In the process many of the outstanding questions earlier LFD studies were answered

ELSEVIER

Nuclear Instruments and Methods in Physics Research Section A: Accelerators, Spectrometers, Detectors and Associated Equipment

Available online 10 May 2016

In Press, Accepted Manuscript — Note to users

Systematic Uncertainties in RF-Based Measurement of Superconducting Cavity Quality Factors

J.P. Holzbauer[1], Yu. Pischalnikov, D.A. Sergatskov, W. Schappert, S. Smith

Show more

doi:10.1016/j.nima.2016.05.025

Get rights and content

Abstract

Q_0 determinations based on RF power measurements are subject to at least three potentially large systematic effects that have not been previously appreciated. Instrumental factors that can systematically bias RF based measurements of Q_0 are quantified and steps that can be taken to improve the determination of Q_0 are discussed.

Keywords

Superconducting; RF

1. Introduction

The intrinsic quality factor, Q_0, of a superconducting cavity is an important measure of its performance. The ability to produce cavities with higher Q_0 could reduce capital and operating costs of future accelerators. Research into both the fundamental superconducting properties and preparation techniques required to achieving high quality factors is ongoing at many institutions [1], [2] and [3]. To fully understand how

Precision RF-Based Measurements of Cavity Quality Factors

- Conventional RF-based quality factor measurements require cavity coupling close to unity: 0.5<β<2

- Much wider range of couplings possible with improved understanding systematic effects
- Test with SSR1 cavity, trombone and reflector able measure Q0 to a few percent with coupling of β~= 1000

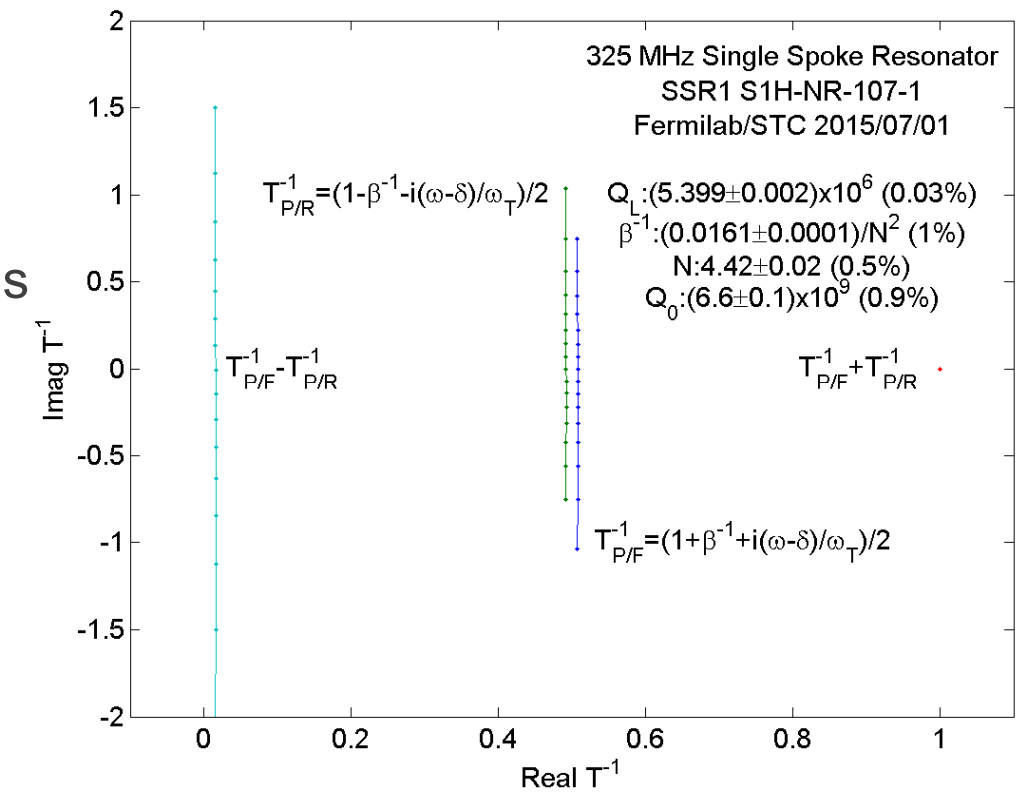

Feedforward LFD Compensation

- PIP-II and LCLS-II CW tests
- Feed-forward compensation of Ponderomotive instability demonstrated
  - Previously demonstrated at Cornell
    - https://www.classe.cornell.edu/rsrc/Home/Research/ERL/ErlPubs2009/Fast.pdf
- Better understanding of cavity behavior
- Progress limited by cold-cavity access

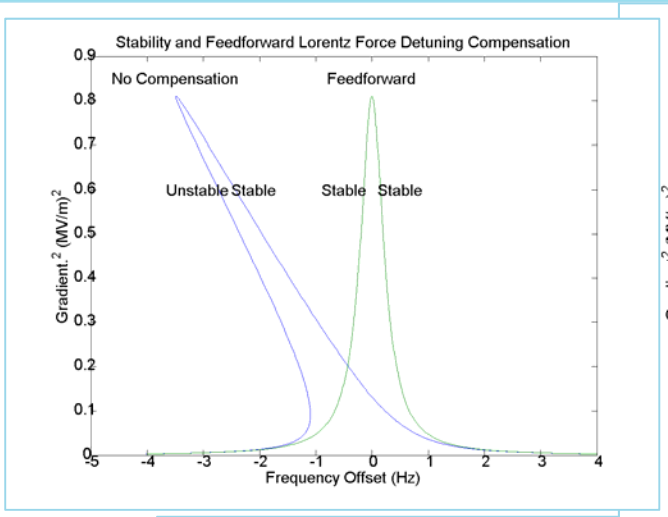

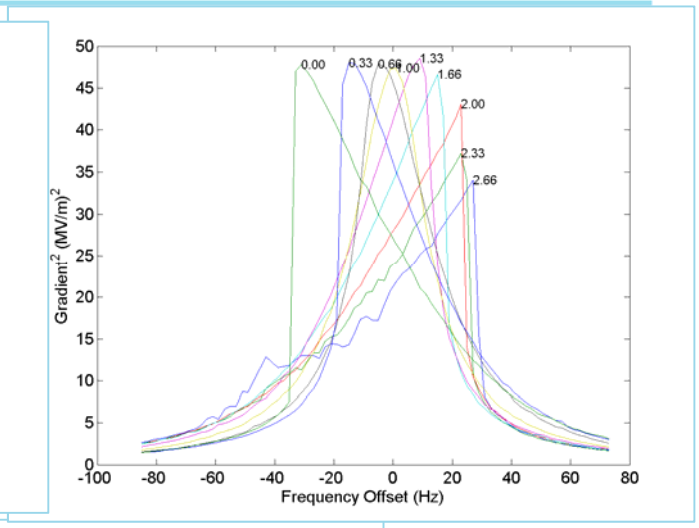

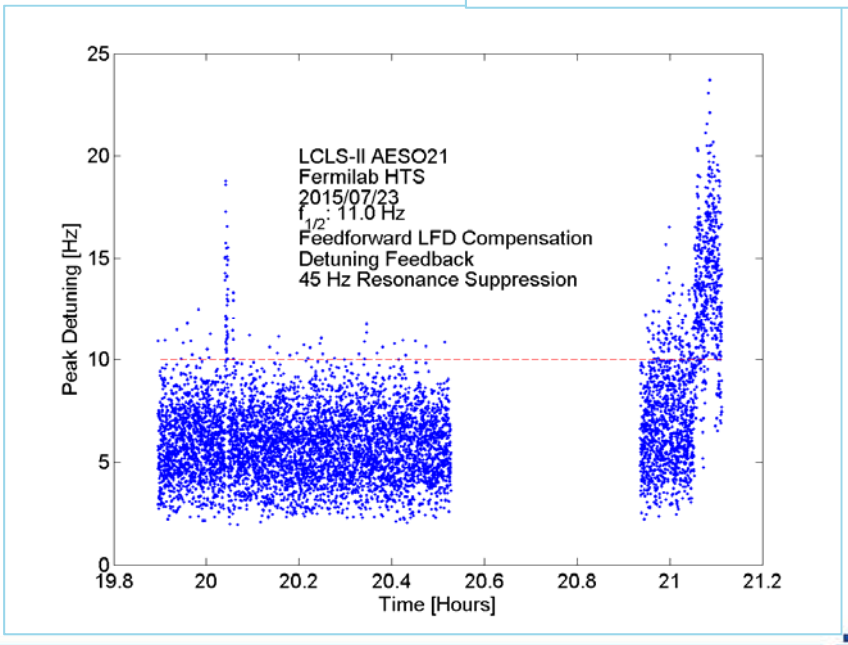

Compensation of the Lorentz Force Detuning in Pulsed SSR1 (325MHz) cavity (STC/FNAL)

Feed-forward LFD compensation proportional to Eacc ^{2}

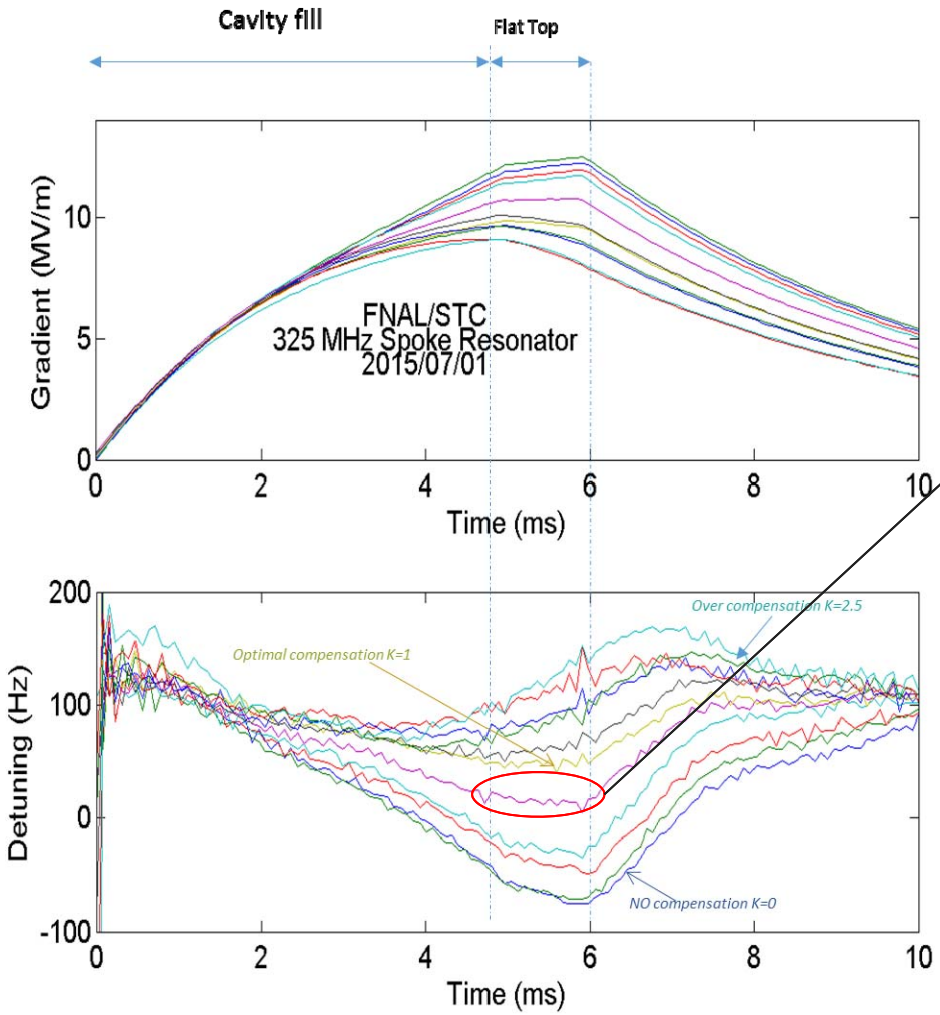

Pulse-to-pulse variation is more problematic
RMS pulse to pulse detuning approximately 10 Hz
(with PIP II target ~3.5Hz)

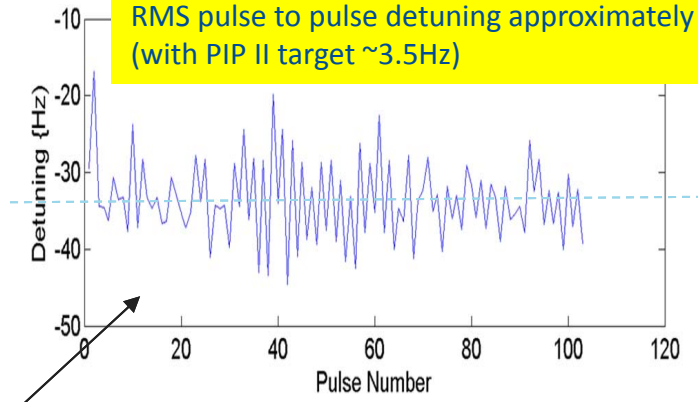

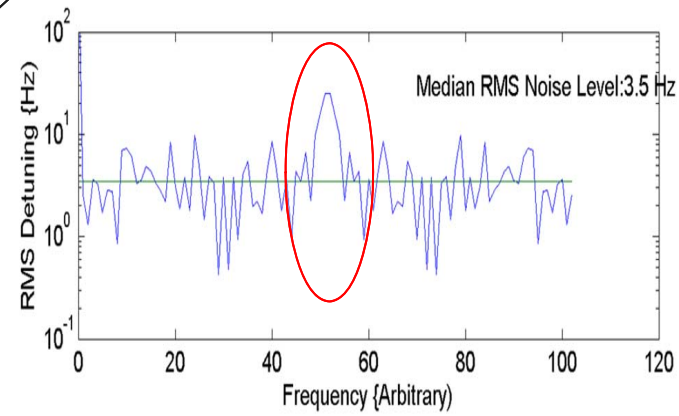

Mean detuning during flattop shows systematic effects
- *Compensation possible if source can be identified*

Residual non-deterministic detuning likely 4 Hz or less
- *It is already close to the PIP-II target*

Improvements likely
- *Effective feedback not operational during this test*

Current Program for PIP-II

- Focus is still on unambiguous demonstration of CW microphonics compensation
  - Adaptive LFD control of pulsed cavities well understood
    - Preliminary demonstration of feedforward LFD control in pulsed cavities
  - Largest source of residual detuning are pulse-to-pulse variations
  - Compensation requires feedback
    - Feedback at the levels required for PIP-II has been demonstrated at low gradients using ad-hoc techniques
- Optimal control provides a coherent mathematical framework for this type of problem

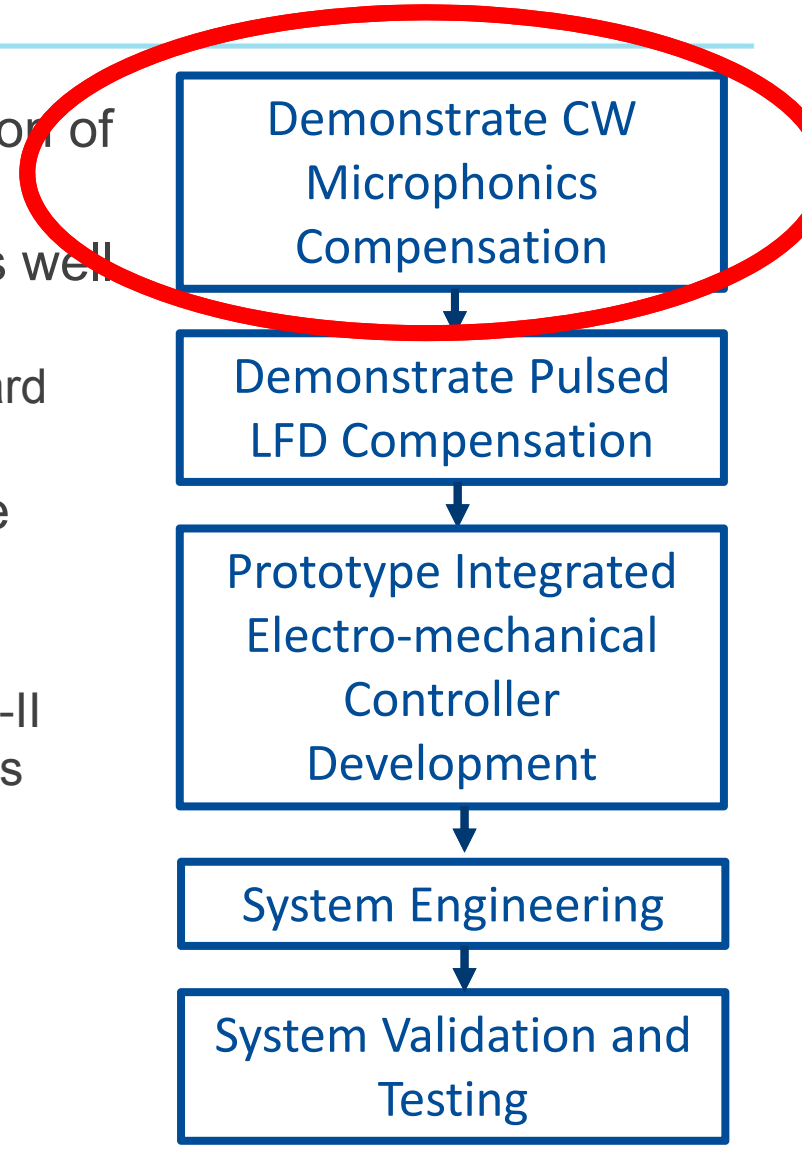

Why Optimal Control

- Optimal control techniques pioneered by Kalman in the early 1960s
- Deterministic prescription that takes system model and noise covariance measurements and generates an optimal controller
- For a given system and noise spectrum, Kalman filter provides the optimum linear estimate of the system state in the L2 sense
  - No other linear filter can do better
- Real-time implementation no more (or perhaps only slightly more) complicated than ad-hoc techniques

- If optimal control works the problem is solved
- If optimal control doesn't work then the problem can't be solved (for all practical purposes)

Cavity Electro-mechanical Model

- Model accelerating mode and each mechanical mode of cavity as harmonic oscillators
- Couplings are non-linear
  - System can be linearized by
    - Feedforward compensation of non-linear terms
    - Perturbative expansion about an operating point

Cavity Electro-Mechanical Model

Continuous-Time Model

The cavity accelerating mode is modelled as a driven, damped harmonic oscillator. If the cavity bandwidth is much smaller than the carrier frequency the envelope of the oscillations is well described by the first order equation

$$\frac{dP(t)}{dt} = -\left((1+\beta^{-1})\omega_T - i\delta(t)\right)P(t) + 2\omega_T F(t)$$

$$\frac{dP(t)}{dt} = \left((1-\beta^{-1})\omega_T + i\delta(t)\right)P(t) - 2\omega_T R(t)$$

$$\omega_T = \frac{\omega_{1/2}}{(1+\beta^{-1})}$$

Each mechanical mode of the cavity can also be modelled as a driven, damped, harmonic oscillator.

$$\frac{d^2\delta_j}{dt^2} + \frac{2}{Q_k}\frac{d\delta_j}{dt} + \omega_j^2\delta_j = \kappa_j^{LFD}|P(t)|^2(t) + \kappa_j^{PZT}V^{PZT}(t) + \kappa_j^{Noise}\sigma_{Mechanical}N^{Mechanical}(t)$$

The total cavity detuning is given by the sum of the detuning of each mode

$$\delta(t) = \sum_{k=0}^{n-1}\delta_k(t)$$

The measured cavity baseband signals are corrupted by additive noise.

$$F^M(t) = F(t) + \sigma_F N^F(t)$$

$$R^M(t) = R(t) + \sigma_R N^R(t)$$

$$P^M(t) = P(t) + \sigma_P N^P(t)$$

The noise terms are assumed to be independent and normally distributed with unit variance.

$$\langle N^{Mechanical}(t)\rangle = \langle N^F(t)\rangle = \langle N^R(t)\rangle = \langle N^P(t)\rangle = 0$$

$$\langle N^{Mechanical}(t)N^F(t)\rangle = \langle N^{Mechanical}(t)N^R(t)\rangle = \langle N^{Mechanical}(t)N^P(t)\rangle = 0$$

$$\langle N^F(t)N^R(t)\rangle = \langle N^F(t)N^P(t)\rangle = \langle N^R(t)N^P(t)\rangle = 0$$

$$\langle\left(N^{Mechanical}(t)\right)^2\rangle = \langle\left(N^F(t)\right)^2\rangle = \langle\left(N^R(t)\right)^2\rangle = \langle\left(N^P(t)\right)^2\rangle = 1$$

Continuous Time State-Space Realization

- Cavity model recast as a continuous-time state-space realization of system of first order linear equations

$$\begin{bmatrix} \frac{dx}{dt} \\ \hline y \end{bmatrix} = \begin{bmatrix} A_C & | & B_C \\ - & + & - \\ C_C & | & D_C \end{bmatrix} \begin{bmatrix} x \\ - \\ u \end{bmatrix}$$

State-Space Realization

The model can be recast as a set of coupled first order equations by making the following substitutions for each of the mechanical modes.

$$\dot{\delta}_j = \frac{d\delta_j}{dt}$$

$$\frac{d\dot{\delta}_j}{dt} + \frac{2}{Q_k}\dot{\delta}_j + \omega_j^2\delta_j = \kappa_j^{LFD}|P(t)|^2(t) + \kappa_j^{PZT}V^{PZT}(t) + \kappa_j^{Noise}\sigma_{Mechanical}N^{Mechanical}(t)$$

The set of coupled first order equations can be written in the form of a (non-linear) continuous-time state-space representation:

$$\begin{bmatrix} \frac{dx}{dt} \\ \hline y \end{bmatrix} = \begin{bmatrix} A_C & | & B_C \\ - & + & - \\ C_C & | & D_C \end{bmatrix} \begin{bmatrix} x \\ - \\ u \end{bmatrix}$$

The continuous-time state, input, output, and feedforward matrices, A, B, C, and D, together with the state, input and output vectors, *x*, u, and y are defined as follows:

$$A_C = \begin{bmatrix} (1+\beta^{-1})\omega_T & \square & \square & \square & \square & \square \\ \square & 0 & 1 & \square & \square & \square \\ \square & -\omega_0^2 & -\frac{2}{Q_0} & \square & \square & \square \\ \square & \square & \square & \dots & \square & \square \\ \square & \square & \square & \square & 0 & 1 \\ \square & \square & \square & \square & -\omega_{n-1}^2 & -\frac{2}{Q_n} \end{bmatrix}$$

$$B_C = \begin{bmatrix} 2\omega_T & -i & \square & \square & \square & \square & \square \\ \square & \square & 0 & 0 & \square & \square & \square \\ \square & \square & \kappa_0^{LFD} & \kappa_0^{PZT} & \square & \square & \square \\ \square & \square & \square & \square & \dots & \square & \square \\ \square & \square & \square & \square & \square & 0 & 0 \\ \square & \square & \square & \square & \square & \kappa_{n-1}^{LFD} & \kappa_{n-1}^{PZT} \end{bmatrix}$$

$$C_C = [1 \quad 0 \quad 0 \quad \dots \quad 0 \quad 0]$$

$$D_C = [-1 \quad 0 \quad 0 \quad 0]$$

$$x = [P \quad \delta_0 \quad \dot{\delta}_0 \quad \dots \quad \delta_{n-1} \quad \dot{\delta}_{n-1}]^T$$

$$u = [F \quad \delta P \quad |P|^2 \quad V^{PZT}]^T$$

$$y = [F^M \quad R^M \quad P^M]^T$$

Discrete Time State Space Realization

- Continuous time system can be approximate by a discrete time system

$$\begin{bmatrix} x_{k+1} \\ - \\ y_{k+1} \end{bmatrix} = \begin{bmatrix} A_{\Delta t} & | & B_{\Delta t} \\ - & + & - \\ C_{\Delta t} & | & D_{\Delta t} \end{bmatrix} \begin{bmatrix} x_k \\ - \\ u \end{bmatrix}$$

Discrete-Time Approximation

A stable discrete-time approximation to the continuous-time system can be obtained by replacing signal values by two point averages and time derivatives with central finite differences.

$$F\left(\left(k+\frac{1}{2}\right)\Delta t\right) \cong \frac{F_{k+1}+F_k}{2}$$

$$R\left(\left(k+\frac{1}{2}\right)\Delta t\right) \cong \frac{R_{k+1}+R_k}{2}$$

$$P\left(\left(k+\frac{1}{2}\right)\Delta t\right) \cong \frac{P_{k+1}+P_k}{2}$$

$$\frac{dP\left(\left(k+\frac{1}{2}\right)\Delta t\right)}{dt} \cong \frac{P_{k+1}-P_k}{\Delta t}$$

$$\delta_j\left(\left(k+\frac{1}{2}\right)\Delta t\right) \cong \frac{\delta_{j_{k+1}}+\delta_{j_k}}{2}$$

$$\frac{d\delta_j\left(\left(k+\frac{1}{2}\right)\Delta t\right)}{dt} \cong \frac{\delta_{j_{k+1}}-\delta_{j_k}}{\Delta t}$$

This yields a discrete time state-space realization:

$$\begin{bmatrix} x_{k+1} \\ - \\ y_{k+1} \end{bmatrix} = \begin{bmatrix} A_{\Delta t} & | & B_{\Delta t} \\ - & + & - \\ C_{\Delta t} & | & D_{\Delta t} \end{bmatrix} \begin{bmatrix} x_k \\ - \\ u \end{bmatrix}$$

$$A_{\Delta t} = \left(I + \frac{A_c \Delta t}{2}\right)^{-1}\left(I - \frac{A_c}{2}\right)$$

$$B_{\Delta t} = \left(I + \frac{A_c \Delta t}{2}\right)^{-1} B_c$$

$$C_{\Delta t} = C_c$$

$$D_{\Delta t} = D_c$$

Optimal State Estimation and Control

- Discrete-time system and noise levels define a quadratic cost function that can be minimized at each time step
- Results give state-Space realizations for
  - Kalman Filter
  - Linear Quadratic Gaussian Controller
- Coefficients do not depend on data
  - Evolve over time but settle to fixed steady state values
  - Steady state values can be calculated analytically or numerically
- Steady state filters suitable for real-time implementation in FPGA

Optimal State Estimation

Recursive cost function at each time step

$$\begin{aligned}\chi^2 &= (x_k - \hat{x}_k)^T \sigma_{\hat{x}_k}^{-2} (x_k - \hat{x}_k) + \\ &\quad (x_{k+1} - Ax_k - Bu_k)^T \sigma_{State}^{-2} (x_{k+1} - Ax_k - Bu_k) + \\ &\quad (y_{k+1} - Cx_k - Du_k)^T \sigma_{y_{k+1}}^{-2} (y_{k+1} - Cx_k - Du_k)\end{aligned}$$

Find the state estimates that minimize the cost function

$$\frac{\partial \chi^2}{\partial x_{k+1}} = \frac{\partial \chi^2}{\partial x_k} = 0$$

System of equations with solution

$$\begin{bmatrix} \hat{x}_{k+1} \\ x_k \end{bmatrix} = \begin{bmatrix} \sigma_{State}^{-2} & -\sigma_{State}^{-2} A \\ -A^T \sigma_{State}^{-2} & \sigma_{\hat{x}_k}^{-2} + A^T \sigma_{State}^{-2} A + C^T \sigma_{y_{k+1}}^{-2} C \end{bmatrix}^{-1} \begin{bmatrix} 0 & \sigma_{State}^{-2} B & 0 \\ \sigma_{\hat{x}_k}^{-2} & -A^T \sigma_{State}^{-2} B - C^T \sigma_{y_{k+1}}^{-2} D & -C^T \sigma_{y_{k+1}}^{-2} \end{bmatrix} \begin{bmatrix} \hat{x}_k \\ u_k \\ y_{k+1} \end{bmatrix}$$

The coefficients of the update matrix evolve with time but they depend only on the system matrices and the noise covariance. They do not depend on the data. Over time the update matrix coefficients will reach fixed steady state values.

$$\sigma_{\hat{x}_k}^{-2} \rightarrow \sigma_{\hat{x}_{Steady\ State}}^{-2}$$

Optimal Control

Linear Quadratic Gaussian Controller

Recursive cost function

$$\begin{aligned}\chi^2 &= (x_{k+1} - \hat{x}_{k+1})^T \sigma_{\hat{x}}^{-2} (x_{k+1} - \hat{x}_{k+1}) + \\ &\quad \left(x_{k+2}^{Target} - Ax_{k+1} - Bu_{k+1}\right)^T \sigma_{State}^{-2} \left(x_{k+2}^{Target} - Ax_{k+1} - Bu_{k+1}\right)\end{aligned}$$

Find the state and input that minimize the cost function

$$\frac{\partial \chi^2}{\partial x_k} = \frac{\partial \chi^2}{\partial u_k} = 0$$

System of two equations with solution

$$\begin{bmatrix} u_{k+1} \\ x_{k+1} \end{bmatrix} = \begin{bmatrix} A^T \sigma_{State}^{-2} B & \sigma_{\hat{x}_{Steady\ State}}^{-2} + A^T \sigma_{State}^{-2} A \\ -B^T \sigma_{State}^{-2} B & B^T \sigma_{State}^{-2} A \end{bmatrix}^{-1} \begin{bmatrix} A^T \sigma_{State}^{-2} & \sigma_{\hat{x}_{Steady\ State}}^{-2} \\ B^T \sigma_{State}^{-2} & 0 \end{bmatrix} \begin{bmatrix} x_{k+2}^{Target} \\ \hat{x}_{k+1} \end{bmatrix}$$

Steady State Covariance

- Analytic calculation of steady state covariance requires solution of quadratic matrix (Algebraic Ricatti) equation
  - Complete the square

Steady State Covariance

Recursive cost function

$$\begin{aligned}\chi^2 &= (x_k - \hat{x}_k)^T \sigma_{\hat{x}_k}^{-2} (x_k - \hat{x}_k) + \\ &\quad (x_{k+1} - Ax_k - Bu_k)^T \sigma_{State}^{-2} (x_{k+1} - Ax_k - Bu_k) + \\ &\quad (y_{k+1} - Cx_k - Du_k)^T \sigma_{y_{k+1}}^{-2} (y_{k+1} - Cx_k - Du_k)\end{aligned}$$

Find the state estimates that minimize the cost function

$$\frac{d\chi^2}{dx_{k+1}} = \frac{d\chi^2}{dx_k} = 0$$

System of equations

$$\begin{bmatrix} \sigma_{State}^{-2} & -\sigma_{State}^{-2} A \\ -A^T \sigma_{State}^{-2} & \sigma_{\hat{x}_k}^{-2} + A^T \sigma_{State}^{-2} A + C^T \sigma_{y_{k+1}}^{-2} C \end{bmatrix} \begin{bmatrix} x_{k+1} \\ x_k \end{bmatrix} = \begin{bmatrix} 0 & \sigma_{State}^{-2} B & 0 \\ \sigma_{\hat{x}_k}^{-2} & -A^T \sigma_{State}^{-2} B - C^T \sigma_{y_{k+1}}^{-2} D & -C^T \sigma_{y_{k+1}}^{-2} \end{bmatrix} \begin{bmatrix} \hat{x}_k \\ u_{k+1} \\ y_{k+1} \end{bmatrix}$$

Of the form

$$\begin{bmatrix} A_{11} & A_{12} \\ A_{21} & A_{22} \end{bmatrix} \begin{bmatrix} x_1 \\ x_2 \end{bmatrix} = \begin{bmatrix} b_1 \\ b_2 \end{bmatrix}$$

Solution

$$x_1 = (A_{11} - A_{12} A_{22}^{-1} A_{21})^{-1} (b_1 - A_{12} A_{22}^{-1} b_2)$$

Covariance

$$\sigma_{x_1}^{-2} = (A_{11} - A_{12} A_{22}^{-1} A_{21})$$

$$\sigma_{x_{k+1}}^{-2} = \sigma_{State}^{-2} - \sigma_{State}^{-2} A \left(\sigma_{\hat{x}_k}^{-2} + A^T \sigma_{State}^{-2} A + C^T \sigma_{y_{k+1}}^{-2} C \right)^{-1} A^T \sigma_{State}^{-2}$$

In steady state

$$\sigma_{x_{k+1}}^{-2} = \sigma_{\hat{x}_k}^{-2}$$

$$\left(A^T \left(\sigma_{State}^{-2} - \sigma_{\hat{x}}^{-2} \right) A \right) (A^T A)^{-1} \left(\sigma_{\hat{x}}^{-2} + A^T \sigma_{State}^{-2} A + C^T \sigma_{y_{k+1}}^{-2} C \right) = A^T A$$

both sides

$+ C^T \sigma_{y_{k+1}}^{-2} C)(A^T A)^{-1} \sigma_{\hat{x}_k}^{-2}$

$(A^T \sigma_{State}^{-2} A + C^T \sigma_{y_{k+1}}^{-2} C)$

$A)^{-1} (A^T \sigma_{State}^{-2} A + C^T \sigma_{y_{k+1}}^{-2} C)$

anspose

$(A^T A)^{-1} A^T) \sigma_{\hat{x}_k}^{-2}$

$(A^T A)^{-1} (I - A^T) \sigma_{\hat{x}_k}^{-2}$

$_{State}^{-2} A + C^T \sigma_{y_{k+1}}^{-2} C)$

A^T

$_{State}^{-2} A + C^T \sigma_{y_{k+1}}^{-2} C)$

$C)(A^T A)^{-1} A^T \sigma_{State}^{-2}$

lgebraic Ricatti (quadratic matrix) equation:

$^{1/2} \sigma_{\hat{x}_{k+1}}^{-2} - N) - N^T N = P^T P$

dentified with factors of the symmetrized steady

$+ (A^T A)^{-1} A^T)$

$)^{-1} (\sigma_{State}^{-2} A + C^T \sigma_{y_{k+1}}^{-2} C)$

$)^{-1} (A^T \sigma_{State}^{-2} A + C^T \sigma_{y_{k+1}}^{-2} C)$

$C^T \sigma_{y_{k+1}}^{-2} C)(A^T A)^{-1} A^T \sigma_{State}^{-2}$

be completed by adding $N^T N$ to both sides to

$(N \pm (P^T P)^{1/2})$

to the equations above to obtain a fixed-

ically optimal state estimate at the current time

t inputs to the system, the current outputs of the

ne step.

$$\begin{bmatrix} & -\sigma_{State}^{-2} A \\ & + A^T \sigma_{State}^{-2} A + C^T \sigma_{y_{k+1}}^{-2} C \end{bmatrix}^{-1} \times$$

$$\begin{bmatrix} & 0 \\ B - C^T \sigma_{y_{k+1}}^{-2} D & -C^T \sigma_{y_{k+1}}^{-2} \end{bmatrix} \begin{bmatrix} \hat{x}_k \\ u_k \\ y_{k+1} \end{bmatrix}$$

Such a set of set of fixed-coefficient equations can be efficiently implemented in software or firmware.

System Identification

- Kalman-Ho Minimal State Space Realization (MSSR) system-identification algorithm uses Singular Value Decomposition of the Hankel Matrix to generate a low-order transfer function from a measured impulse response
  - Drive piezo with swept frequency sine waves
  - Fourier transform
  - MMSR
  - Continous-time state-space realization needed to generate optimal controller

Effective construction of linear state-variable models from input/output functions [1])

Die Konstruktion von linearen Modellen in der Darstellung durch Zustandsvariable aus den Beziehungen für Ein- und Ausgangsgrößen [1])

By B. L. HO[2]) and R. E. KALMAN[3]), Stanford, California (USA)

A new algorithm is given for the effective construction of minimal realizations of a linear, finite-dimensional dynamical system from its external description, which is displayed via the Markov parameters. The algorithm can also be used to prove various abstract results in realization theory; we give a proof of the well known fact that any two minimal realizations are isomorphic.

Es wird ein neuer weitreichender Algorithmus abgeleitet, der zu der minimalen Realisierung von linearen dynamischen Systemen endlicher Ordnung führt, wenn man von den Beziehungen ausgeht, wie sie bei der Beschreibung von Systemen durch die Ein- und Ausgangsgröße Verwendung finden; er macht von den sogenannten Markovschen Parametern Gebrauch. Den Algorithmus kann man auch zum Beweis von einigen abstrakten Ergebnissen der „Realisierungstheorie" heranziehen. So wird z. B. die bekannte Tatsache bewiesen, daß zwei beliebige minimale Realisierungen isomorph sind.

1. Introduction

The basic task of engineering is to translate performance specifications into a blueprint from which a system can be built. We shall be concerned here with a very special but important idealization of this problem, which is technically known as the problem of realization [1], [2], [3].

Suppose we are given an external description of a linear dynamical system, such as an impulse-response matrix or a frequency-response matrix. This data may be a performance specification or it may be the result of experimental measurements on a system. We wish to realize the external description via an equivalent internal description, namely a set of state-variable equations. If we are interested in synthesis, these equations are the first step toward producing the blueprint. If we are interested in analyzing experimental data, then these equations are an efficient and useful model with which we can proceed to further analysis and optimization.

The problem of realization for linear, stationary systems was first stated by *Elmer Gilbert* [4], who gave an algorithm for computing the map: transfer function matrix→state-variable differential equations[4]). A second algorithm for the same problem was given at the same time by *Kalman* [1], using the theory of controllability and observability. Both algorithms require linear-algebra type computations. The deeper theory of the problem consists of a generalization of the classical theory of elementary divisors [2], which is today best expressed in the language of modules [3]. This theory leads to a third algorithm, namely the well-known one which exhibits the canonical form under equivalence of a rectangular polynomial matrix [5, Volume I, Chapter VI].

We present here an entirely different method for computing a realization, which was evolved from the study of the so-called *Markov parameters*, well known in linear stability theory [6]. The following claims can be made for the new method:

a) Only very simple numerical operations are needed. In fact, this is probably the simplest method for computing a realization that will ever be found.

b) Theoretical properties of realizations can be easily proved via this method. For instance, there is a very simple formula (Proposition 2) for the dimension of a minimal realization.

c) Every realization of a given input/output relation can be obtained with this method.

[1]) This research was supported in part by the National Aeronautics and Space Administration under NASA Grant NGR 05-020-073. The paper is based in part on a dissertation of B. L. Ho at Stanford University.

[2]) Engineering Mechanics, Stanford University, Stanford, California, and IBM ASDD Laboratory, San José, California.

[3]) Engineering Mechanics and Electrical Engineering, Stanford University, Stanford, California.

[4]) The scalar case of this problem is quite elementary and has long been known. It is not widely appreciated that the general case is difficult as well as important.

Real-Time Implementation

- Forward, reflected, probe 13 MHz IF signals digitized with 14 bit/104 MHz ADCs
- Digitized signal converted to baseband and processed by FPGA
- Result sent to 14 bit/104 MHz DAC connected to the piezo drive amplifier
- Discrete time state-space realization programmed into FPGA provides rapid real-time performance
- State-space coefficients can be set from Matlab interface for maximum flexibility
- Hardware purchased 10 years ago for ILC
  - Performance is adequate and newer hardware could entail a steep learning curve

VHS-ADC/DAC - User's guide - v1.5

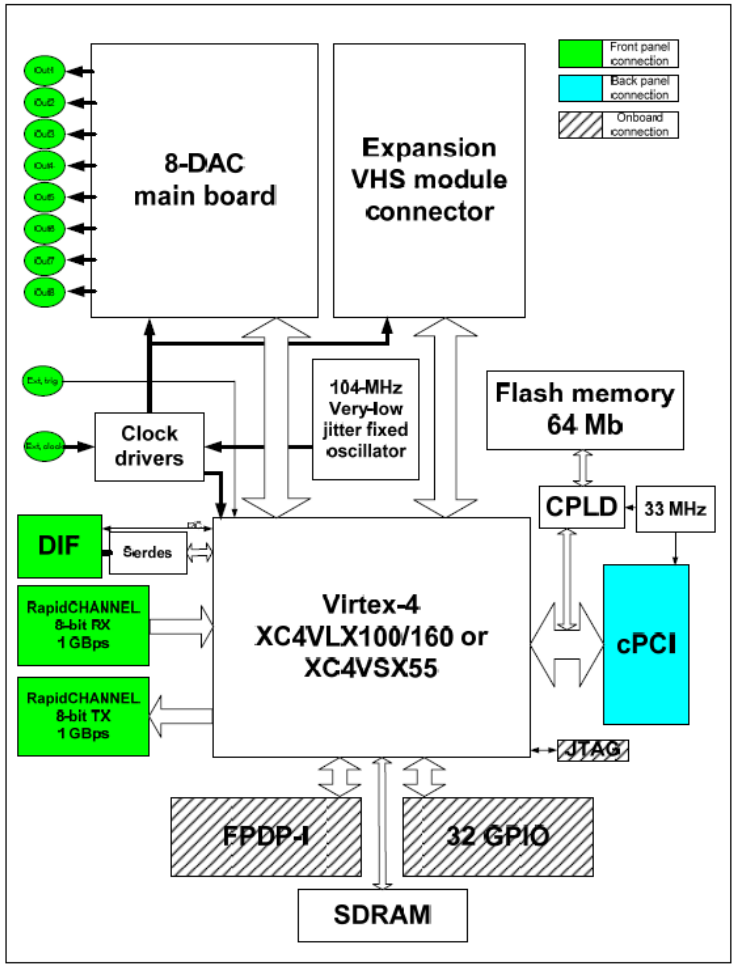

PIP-II Resonance Control Program Deliverables

- A set of fully documented, fully tested real-time implementation of algorithms capable of meeting the PIP-II specs for combined resonance frequency, phase, and amplitude stability.
- Support for the production implementation of an integrated electromechanical controller by the AD/LLRF group
- System validation and testing in conjuction with the AD/LLRF group

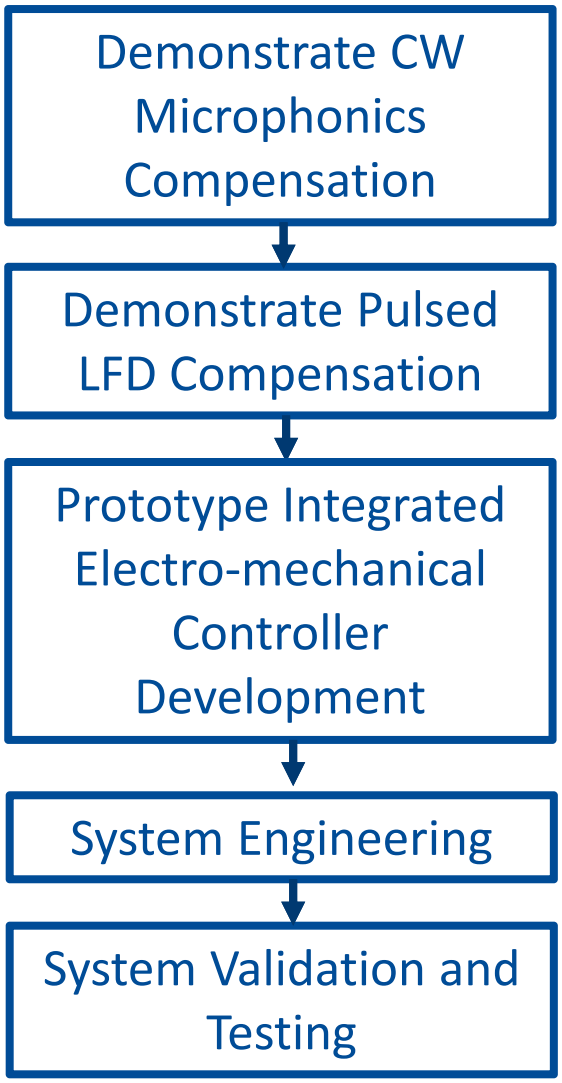

Limits to Progress

- Progress to date has been limited almost entirely by our access to a cold cavity
- We have the
  - Manpower
  - Equipment
  - Knowledge
- When a cavity has been available we have made progress
- When no cavity has been available we have made little progress

You need HOW MUCH test time?....

- Every cavity is slightly different
  - Sometimes more than slightly…
- Developing suitable algorithms is extremely time intensive
  - No substitute for a real cavity
  - Simulators are only as good as the cavities tested previously
- Test time at an absolute premium
- Progress on microphonics at FNAL to date has been entirely

11

Required Resources

- **Cold cavity time!**
- **More cold cavity time!!**
- **Even more cold cavity time!!!**

Conclusion

- Active resonance control will be critical to the successful operation of PIP-II
  - Operating narrow-bandwidth cavities in pulsed mode represents a significant challenge
    - Will require a combination of the best LFD control demonstrated to date with the best microphonics control demonstrated to date
    - Passive resonance control measures are equally if not more important
- Developing the algorithms needed to demonstrate feasibility of active control at the level required for PIP-II is a painstaking task that will require considerable cold cavity test time
- The resonance control group has
  - A well defined program to pursue
  - A demonstrated a track record of pushing the envelope on cavity characterization and control
- Progress to date has been limited almost entirely by access to a cold cavity