Fermilab

Managed by Fermi Research Alliance, LLC for the U.S. Department of Energy Office of Science

PIP-II Vacuum Segmentation and Requirement (low particulate)

Alex Chen

April 5, 2016

PIP-II document

outline

- Requirement of SRF Accelerators
- PXIE/PIP2 segmentation
- Segmentation of other SRF accelerators

Requirement (particles, focus on FE)

- The focus is on clean vacuum (or low particulate vacuum) due to FE is key for CM performance.
- Current State of Knowledge in the field:(as Dale Gill, of LCLS-II)
  1. No particles → GOOD
  2. Large particles →BAD
  3. Small particles → size threshold may exist
- The summery major requirement for SRF accelerators:
  1. Class 10(aka ISO-4) for cavity assembly and CM connection
  2. Mass flow restricting to 50mbar.l/s until (P<1 mbar, dP<1 mbar) during Pumping/venting
  3. Pumping/venting ports away from CMs
  4. Fast Closing valve to prevent or reduce the damage from vacuum failures in adjacent warm sections

Segmentation

Vacuum segment is

1. to manage the requirement above and
2. operation or commissioning convenience

However, the segment is also driven by instrument/control/cryo etc.

Current PXIE MEBT configure in term of segmentation

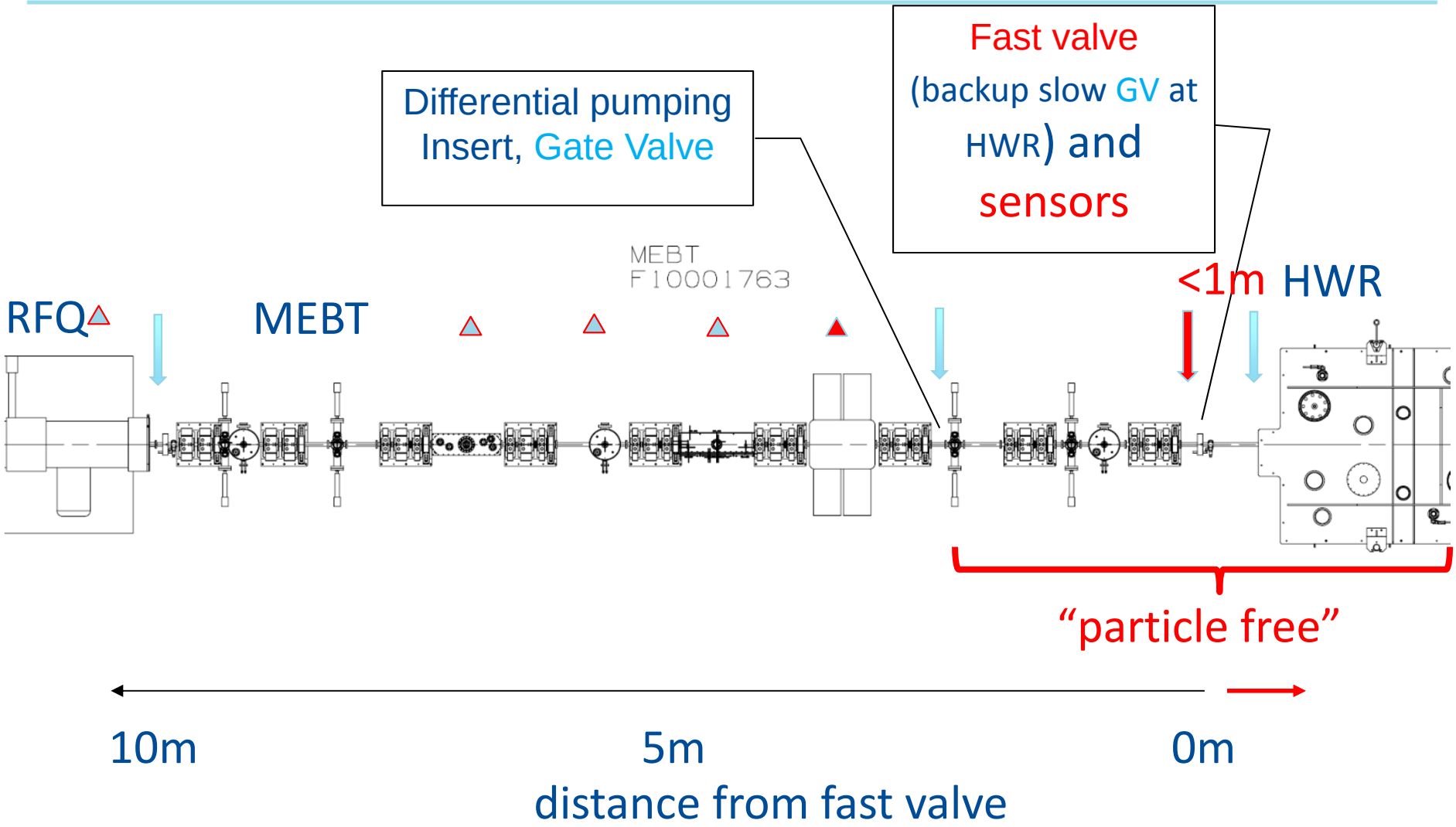

PXIE Vacuum *(pressure profile in MEBT)*

PXIE_MEBT Residual Gas Pressure Profile

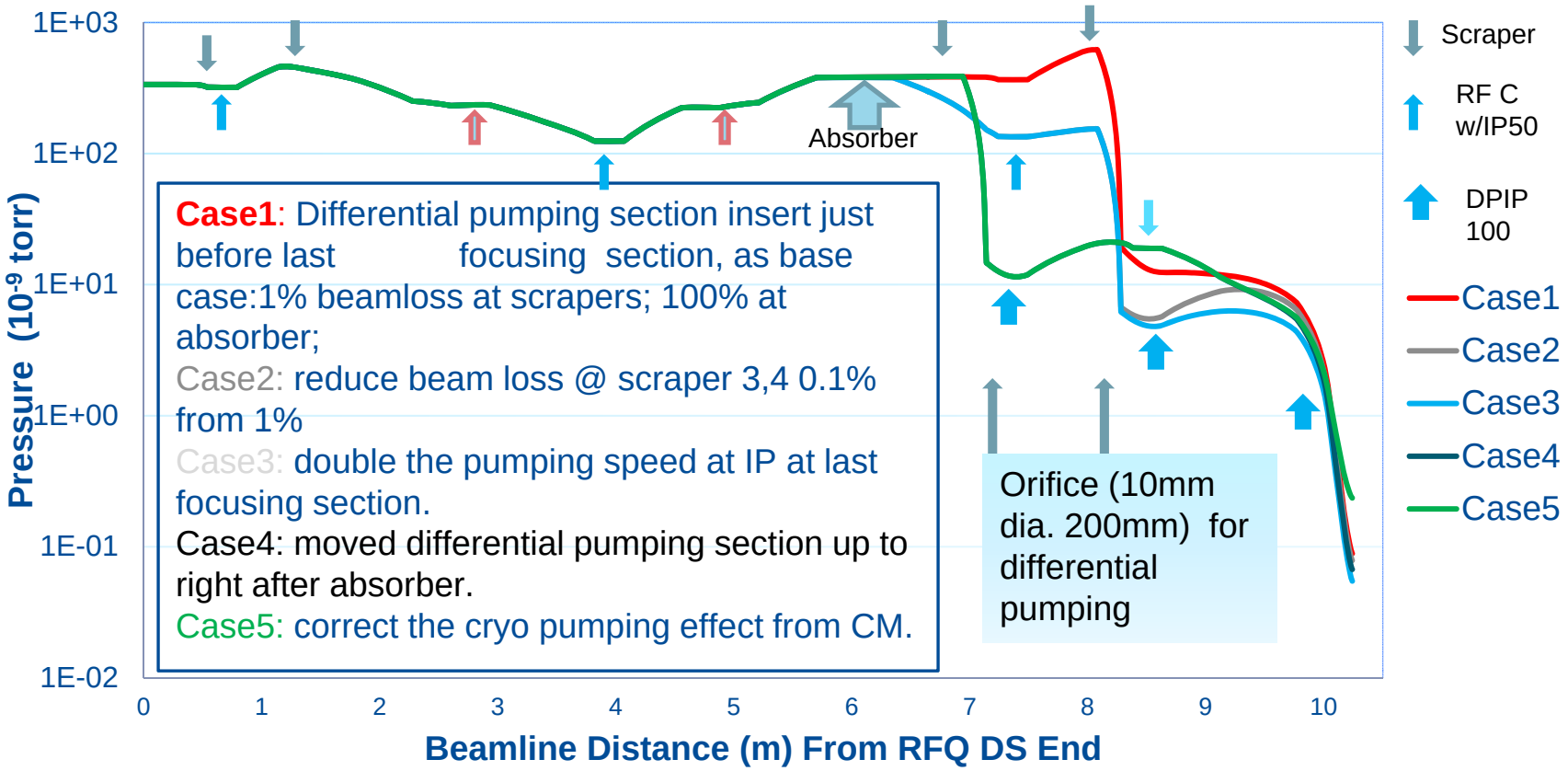

Draft Segmentation of PIP-II LINAC

- Each CM has pneumatic gate vales (~1s) at both ends
- 25 cryomodules total
- 2 Fast action Valves(~10 ms) at both ends of CM string

Type	N CM
HWR	1
SSR1	2
SSR2	7
LB650	11
HB650	4

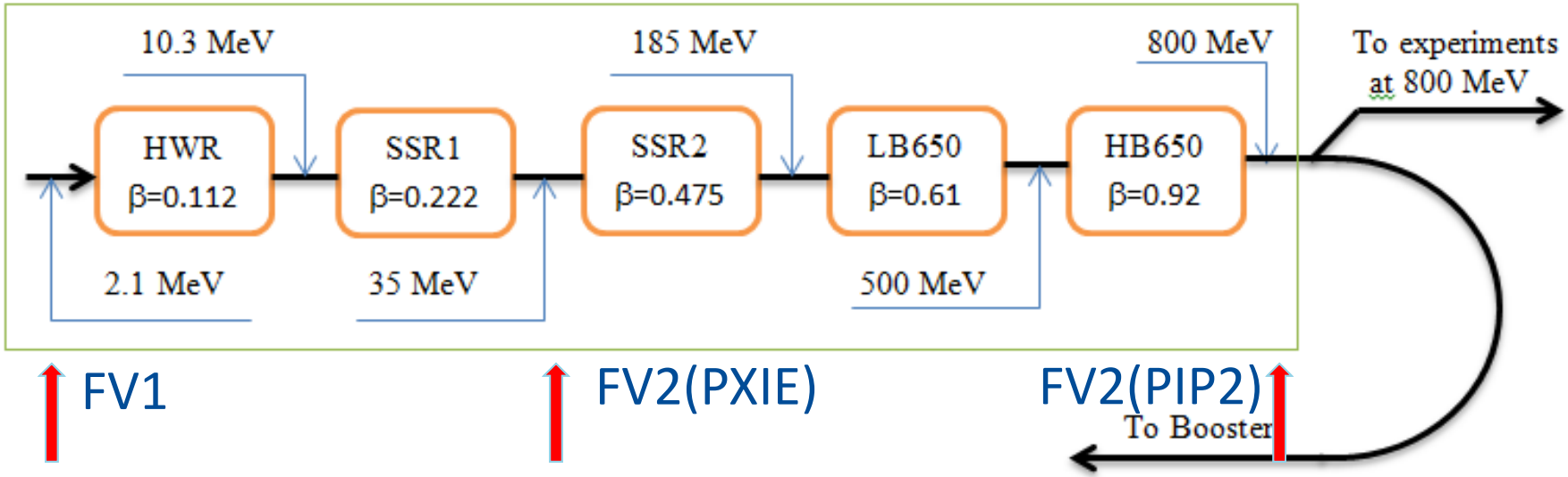

Segmentation of SNS (*courtesy of J. Price*)

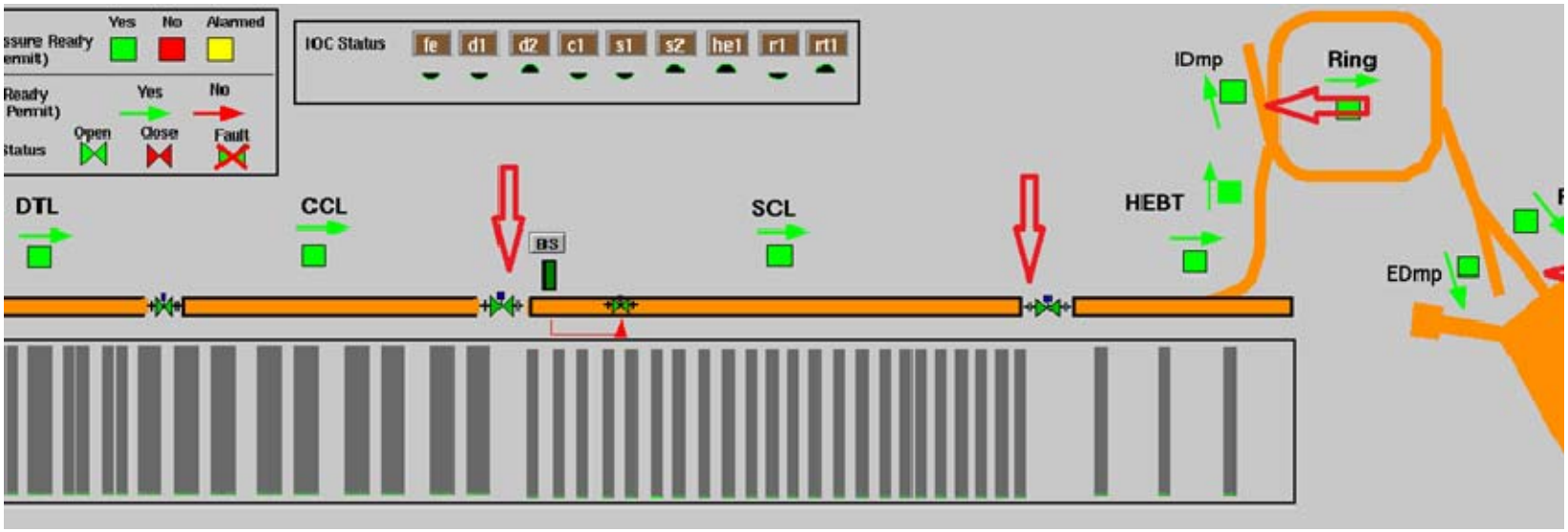

- 23 CM in SCL,
- 1.5m FV-CM (2 for SCL, 4 FV total)
- 2 sensoring points w/ “AND”logic,
  Nearest sensoring point is 2m from FV

Segmentation of CEBAF (*courtesy of J. Heckman*)

- ~25 CM each LINAC
- FV per 4 CM initially, removed or deactivated due to false action
- 3ft FV-CM

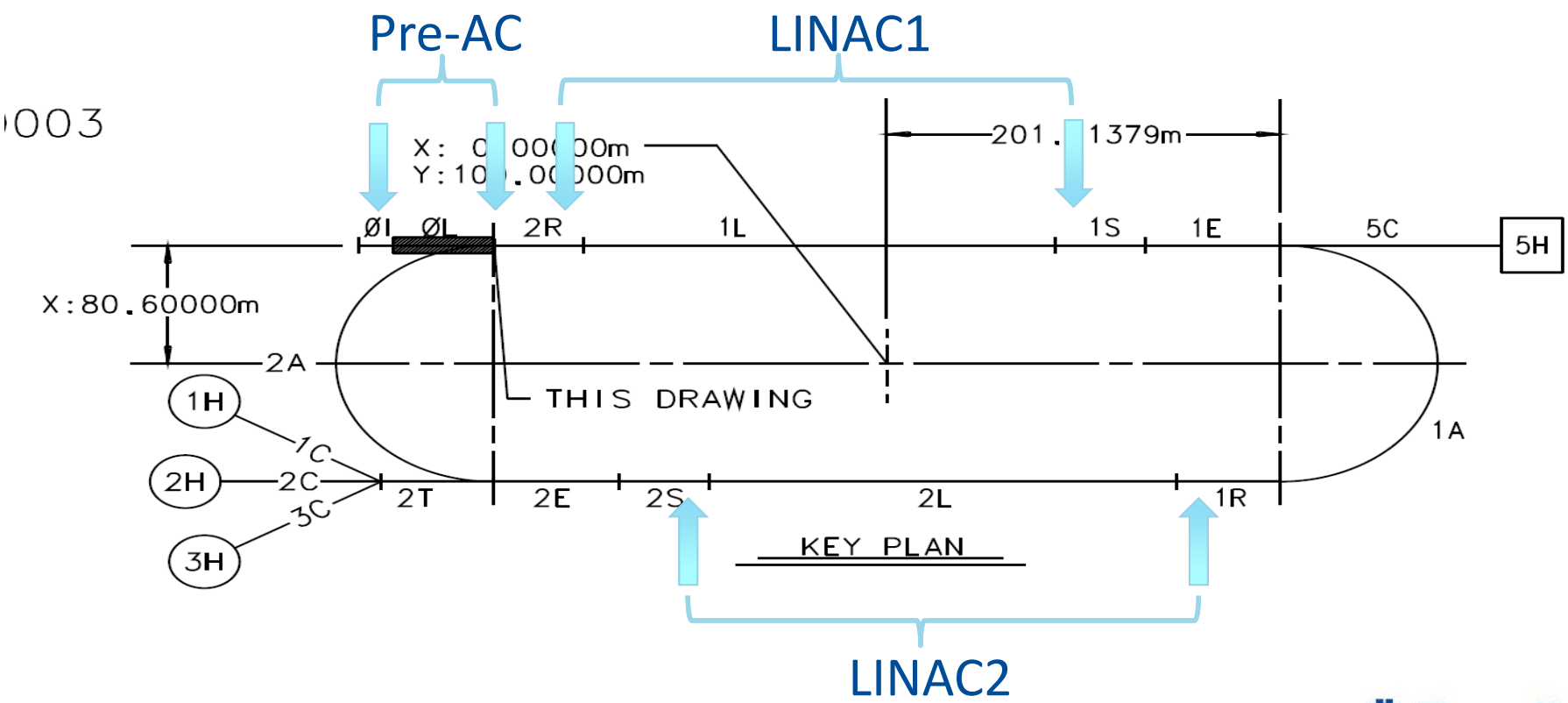

Segmentation of CEBAF (*courtesy of J. Heckman*)

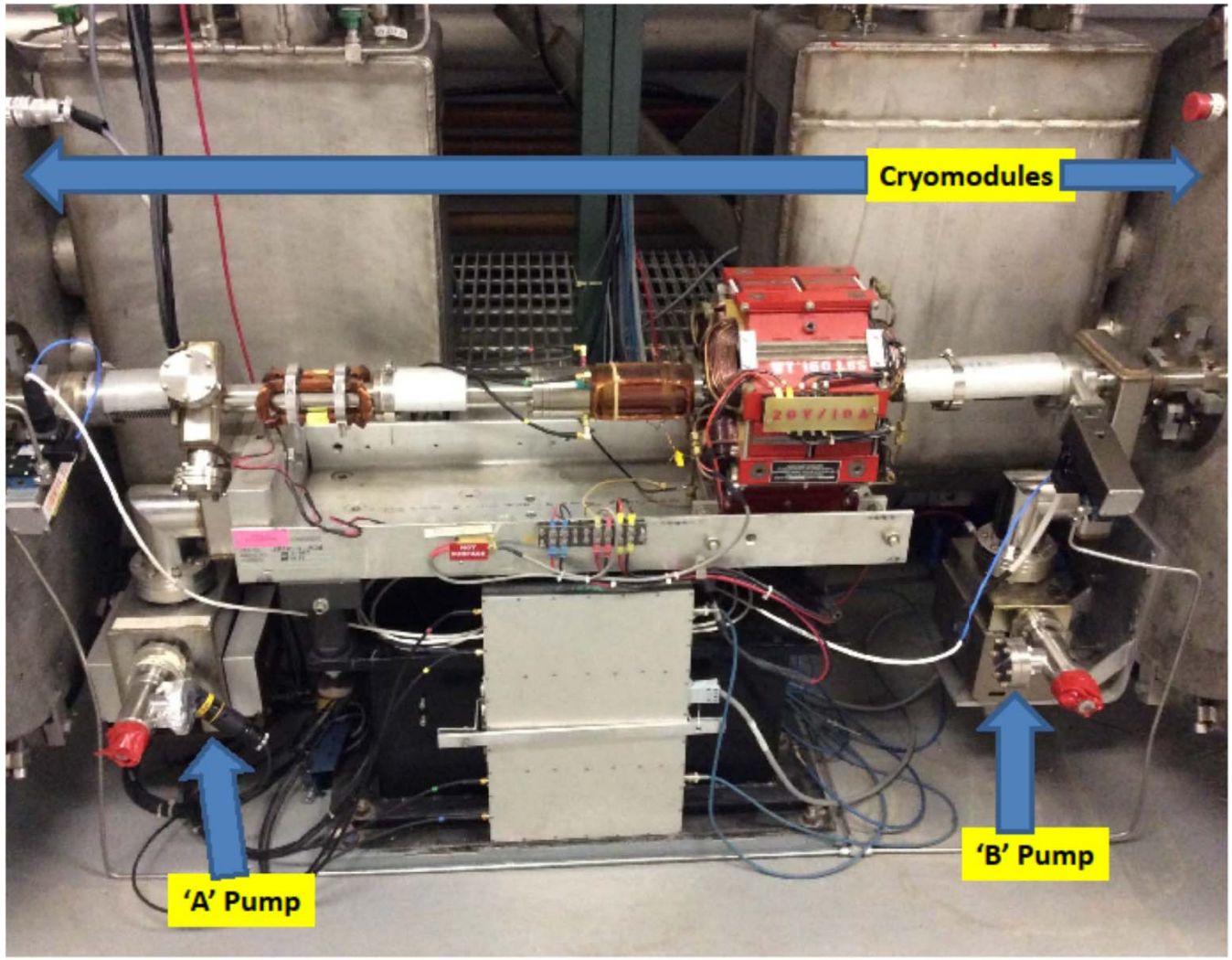

Pressure at pump A and B (E-10 torr for most, some at E-9, a few in E-8)

Segmentation of LCLS-II(*courtesy of Y. He*)

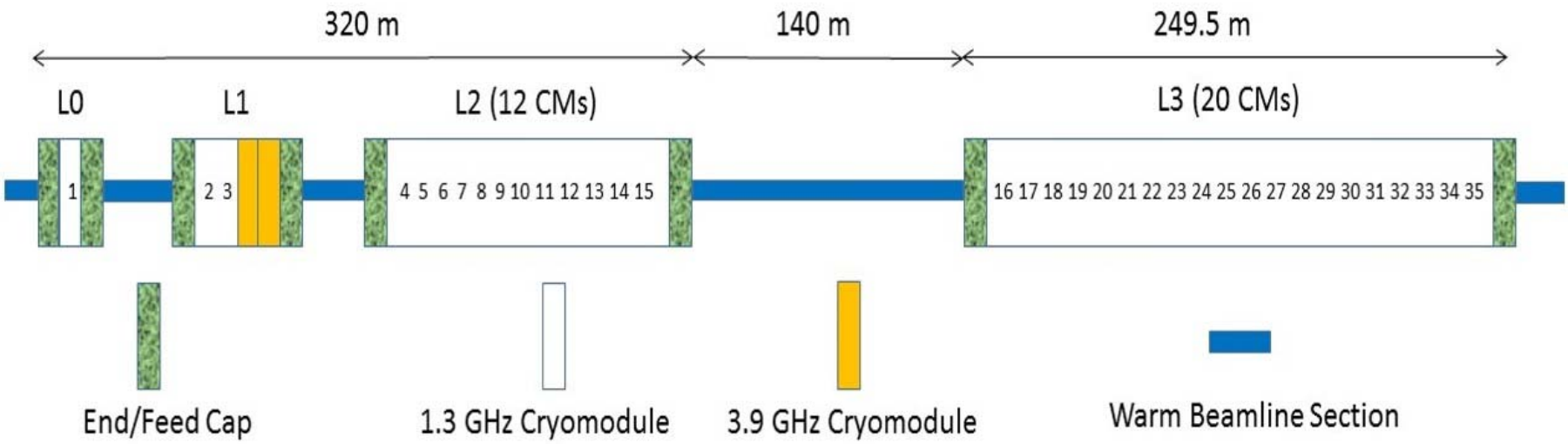

Segmentation of LCLS-II(*courtesy of M. Ferreira*)

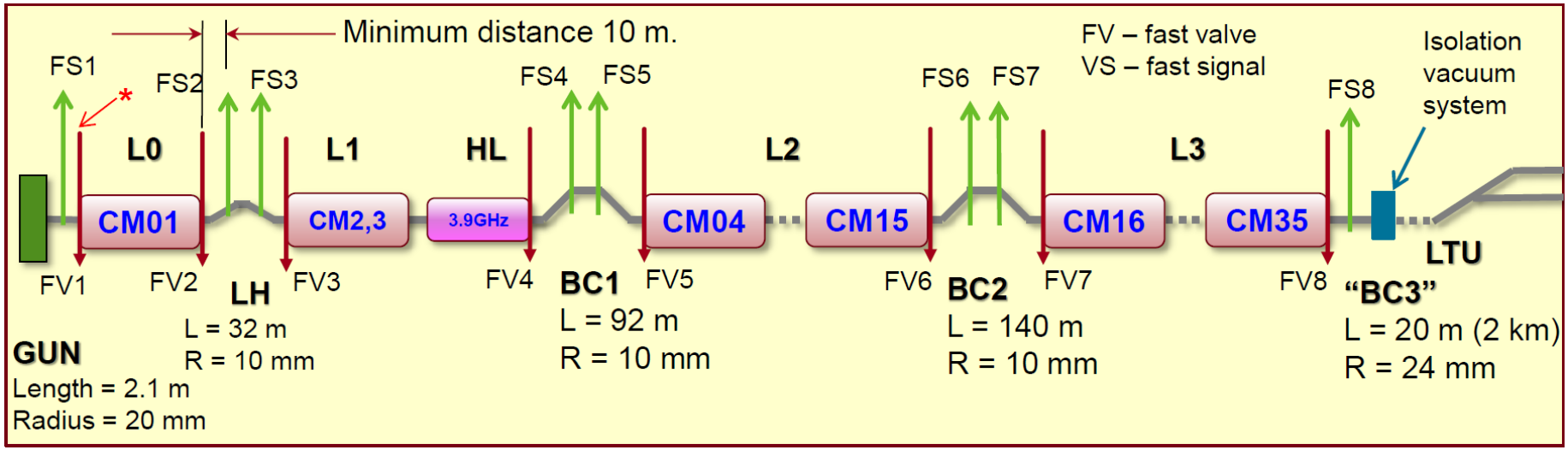

8 FV, the longer string contain 20 CMs

Inter-connect Unit of LCLS-II(*courtesy of Y. He*)

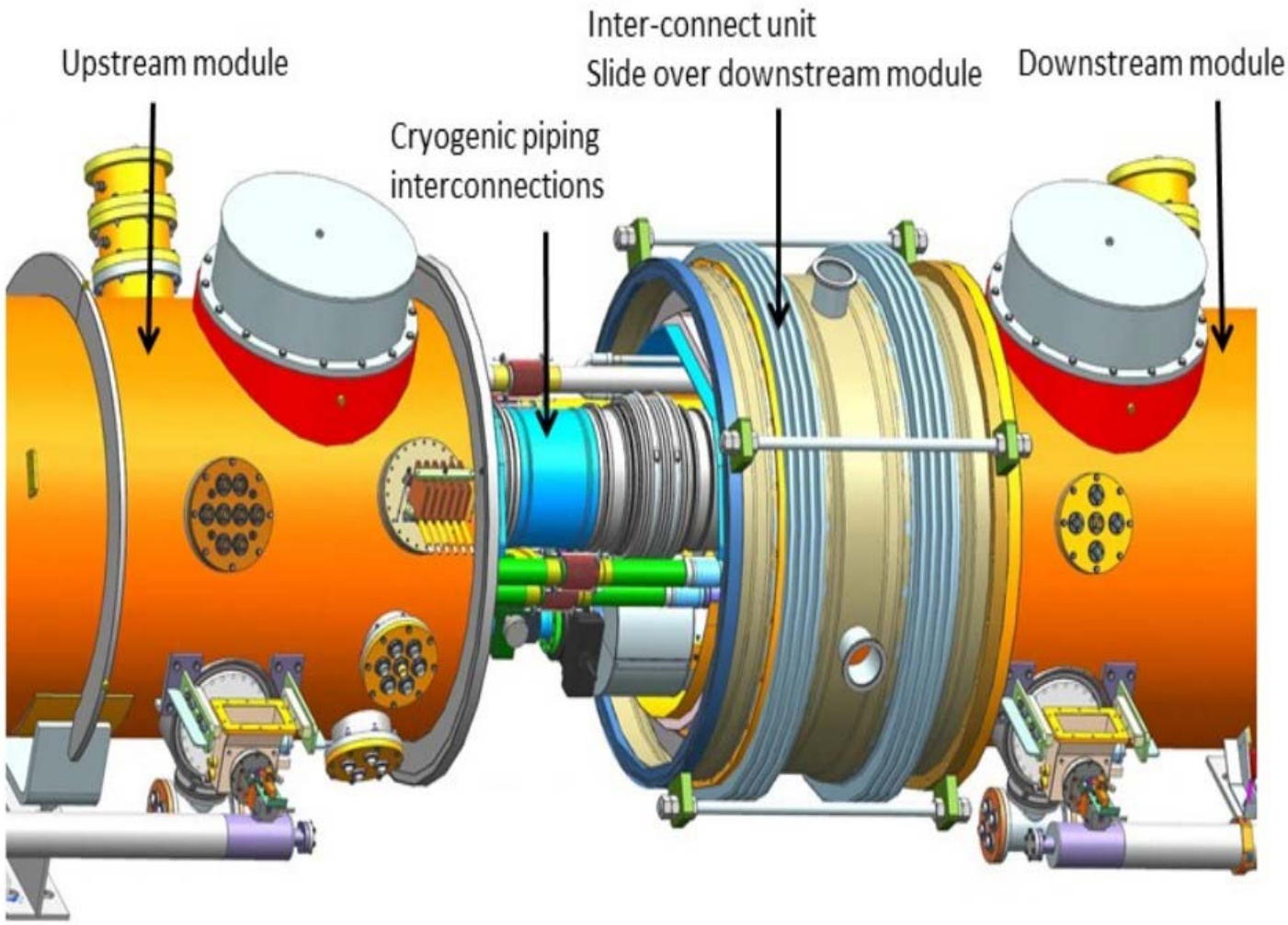

Segmentation of LCLS-II(*courtesy of Y. He*)

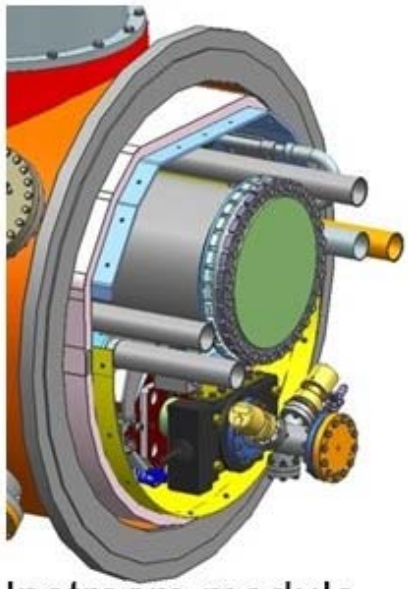

Upstream module

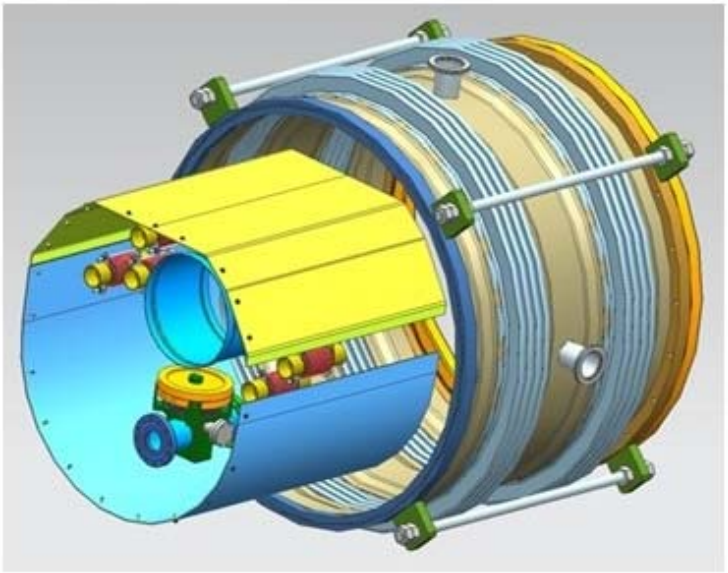

Inter-module kit

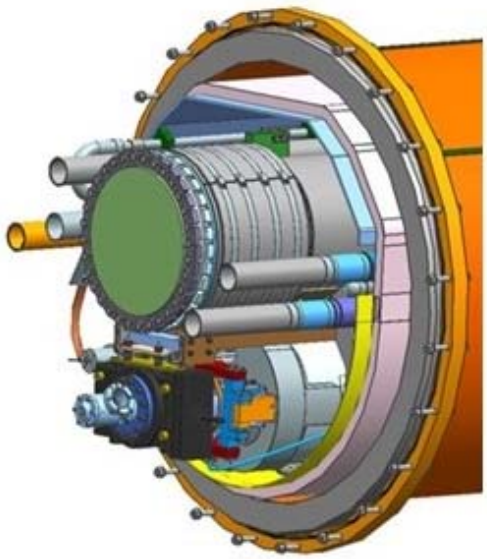

Downstream module

- Vacuum vessel inter-module bellows unit, F10009987, leak checked, but no blank flanges provided
- Thermal shield, F10038024 & F10038467
- HGRP, F10030193
- Bellows and spools for cryogenic pipes (Qty. 5), F10030695
- HOM absorber, F10017631
- MLI blankets (10 layers to 2K-8K components, 30 layers to 35-55K)
- Gaskets, fasteners, intercept straps

J-Lab mini workshop on beam-line field-emitter particulates in CEBAF SRF linacs, Feb. 29, 2016

- https://www.jlab.org/indico/