Status of Mechanical Design of LEBT

Rich Andrews, Matt Alvarez,
Tim Hamerla, Danny Snee

LEBT Evolution

- Current Configuration
  - Ion Source
  - Solenoid (w/ Isolated Diaphragm)
  - DCCT
  - Donut
  - Faraday Cup
- Phase 2
  - All of the above components
  - Emittance Scanner (in several positions)
- Phase 3
  - All of the Phase 2 components
  - Solenoids 2 and 3 (with Isolated Diaphragms)
  - Chopper
  - Toroid
- Final Configuration
  - All of the above components
  - Scraper
  - RFQ Transition

Existing Configuration

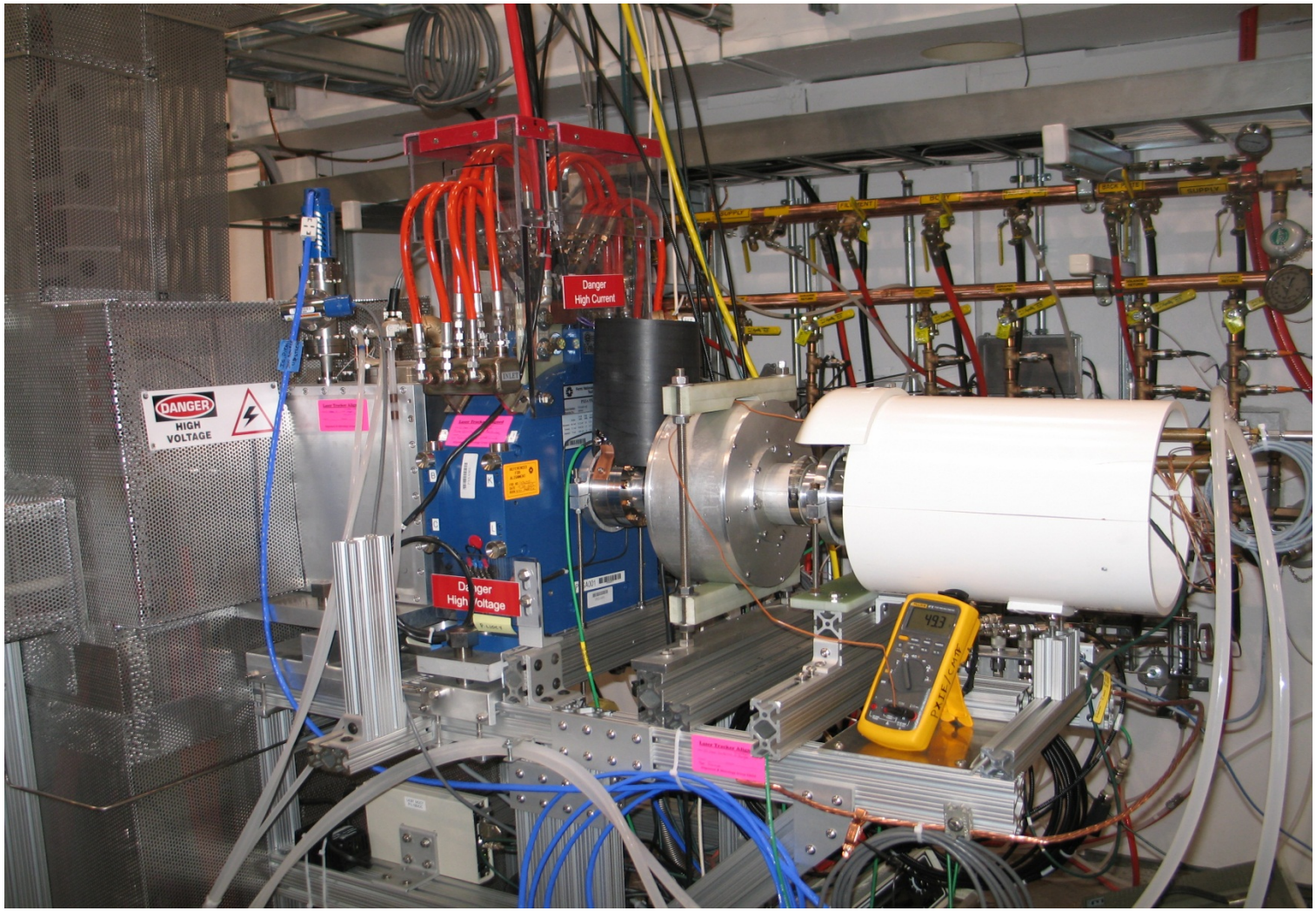

Thursday Shutdown

- Install a window in the Ion Source:
  - All materials on hand: flange w/ glass window and leaded glass to cover it & clamps to hold it

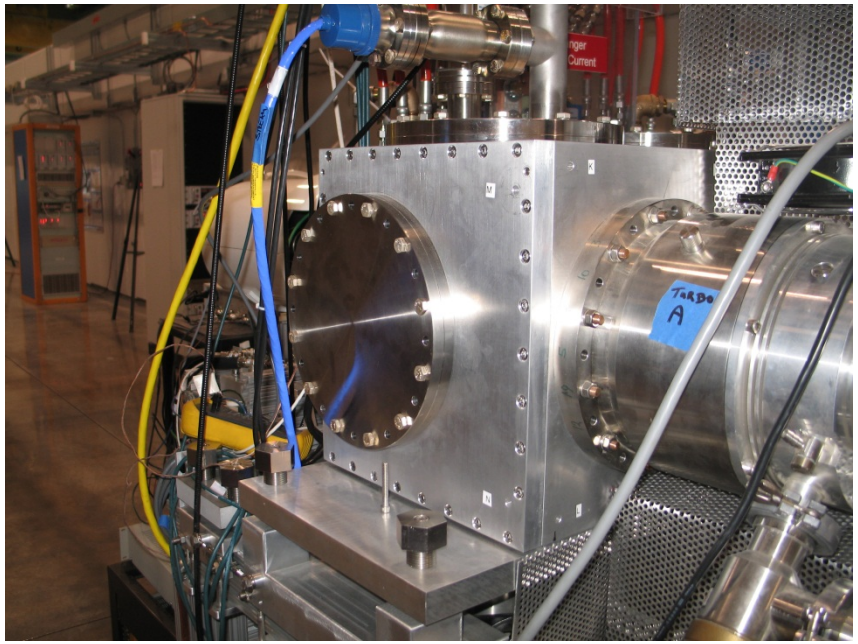

- Install a diaphragm to protect the bellows:
  - All parts in house, cleaned and stored at CMTF

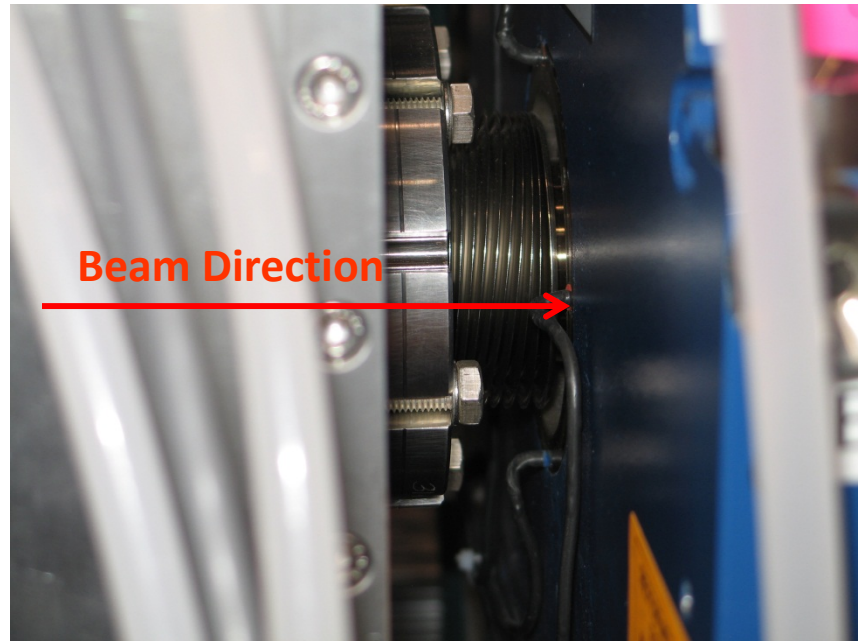

Phase 2

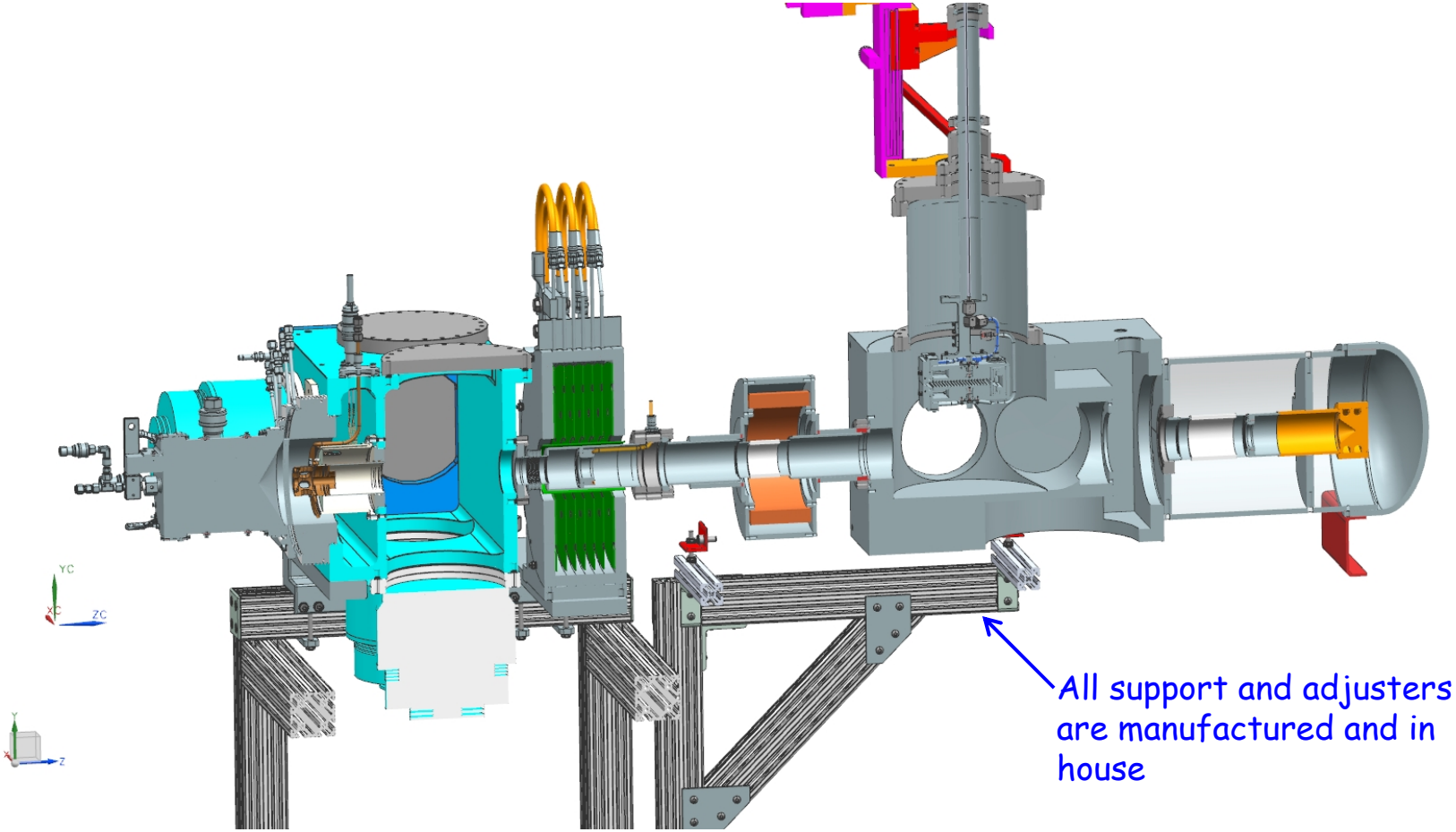

Emittance Scanner Status

(from Matt Alvarez)

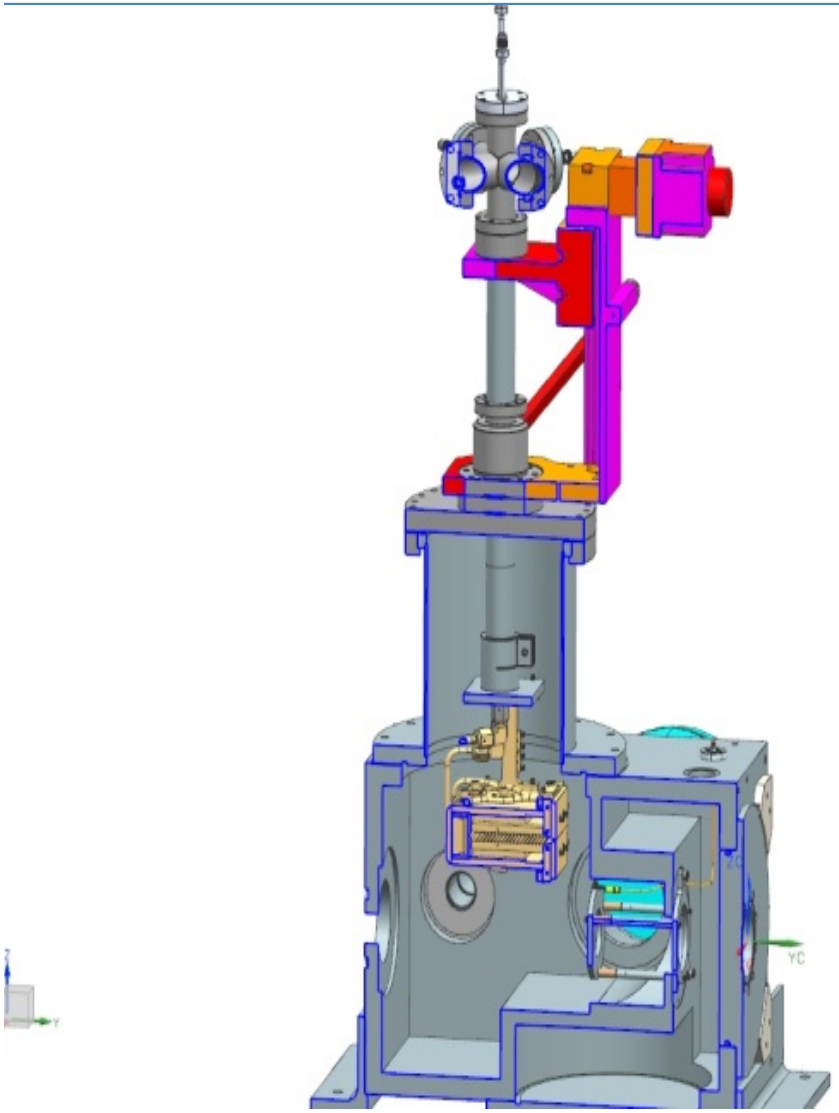

- Emittance Scanner Timeline
  - Integrating motor, potentiometer, and limit switches into software (1-week)
  - Verify the HV plates are working properly (1 wk.)
  - In vacuum cables arrive
  - Bake emittance scanner graphite foils (1-week) Finalize assembly
- D-Pace Box timeline (most work can be done concurrently)
  - Leak check upstream and downstream flanges (1-week)
  - Attain Turbo pump from HINS (1-day)
  - Leak check emittance scanner spool piece and install it on the D-pace box (2-days)
  - Install emittance scanner into D-pace box and perform a final leak check (2-days)
- D-pace Box Installation Summary
  - Pre-installation
  - Transport assembly to CMTF
  - Align D-pace box using reference made by Alignment
  - Install Turbo pump and Faraday cup
  - Make up vacuum connections on D-pace box.
  - Pump down and leak check

LEBT Phase 3+

(one of the possible configurations)

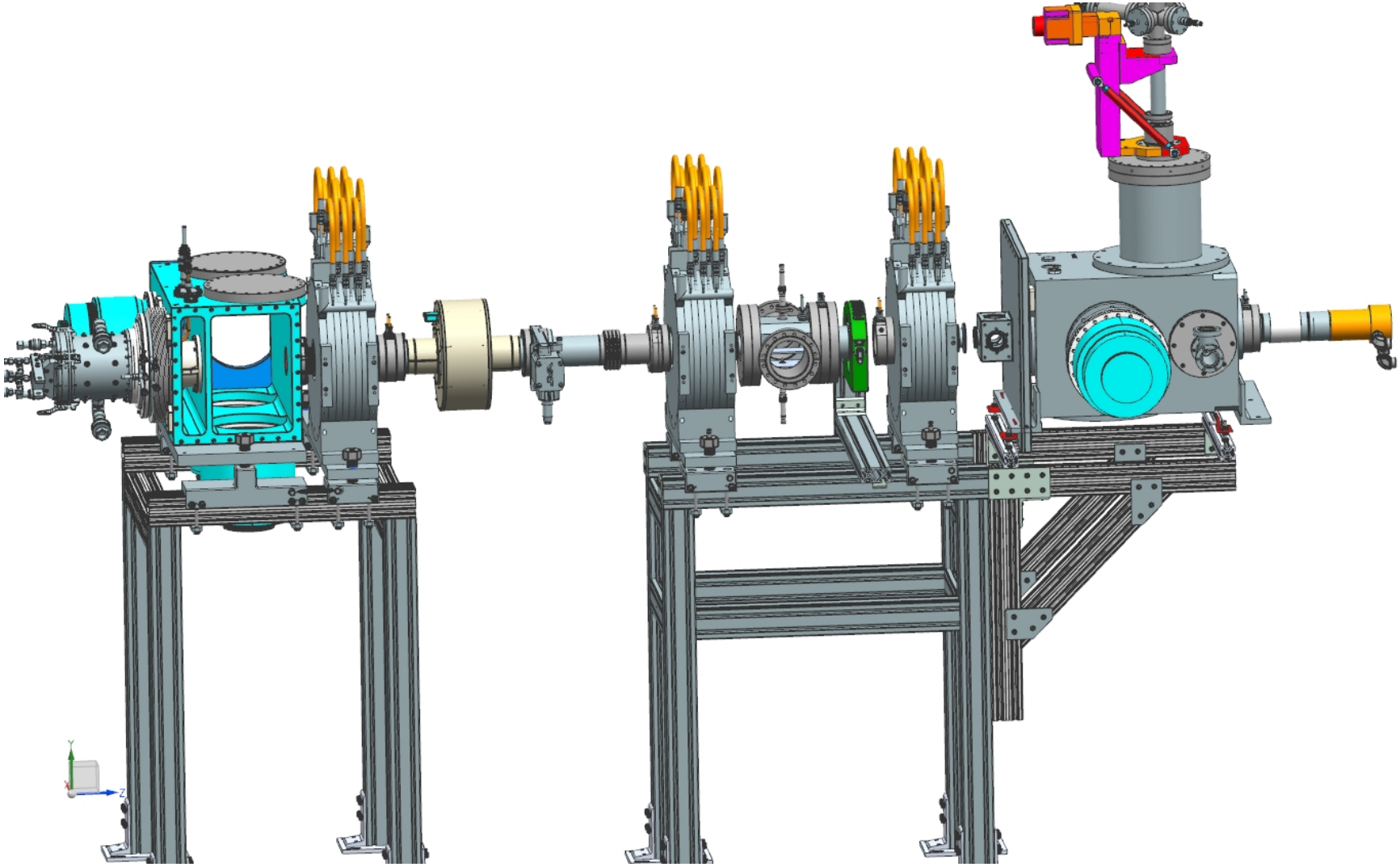

Phase 3 evolving

Solenoid Stand procured and @ CMTF
(solenoid support and adjusters also in-house)

Solenoid @ IB-1 for field measurements
(all solenoids in-house, Alignment work complete)

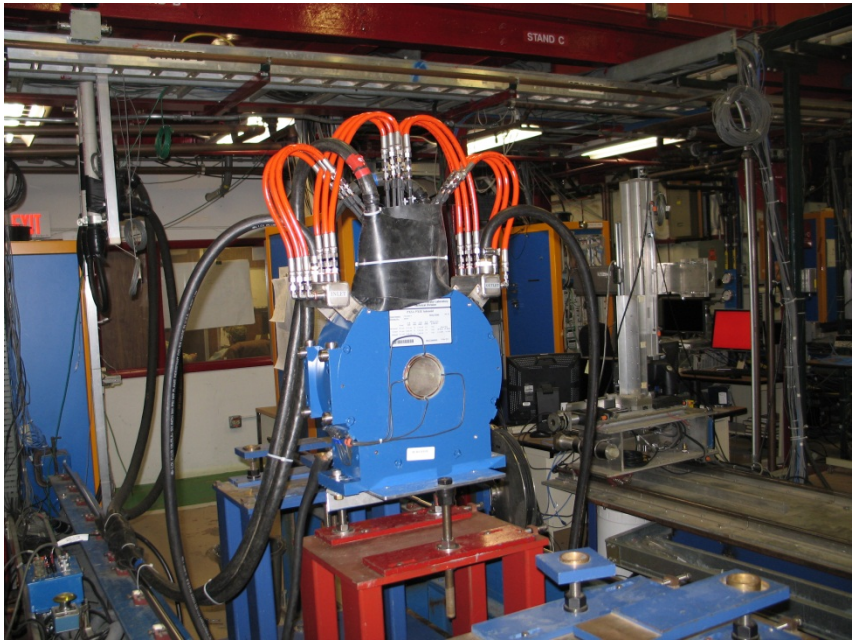

Chopper & Toroid Status

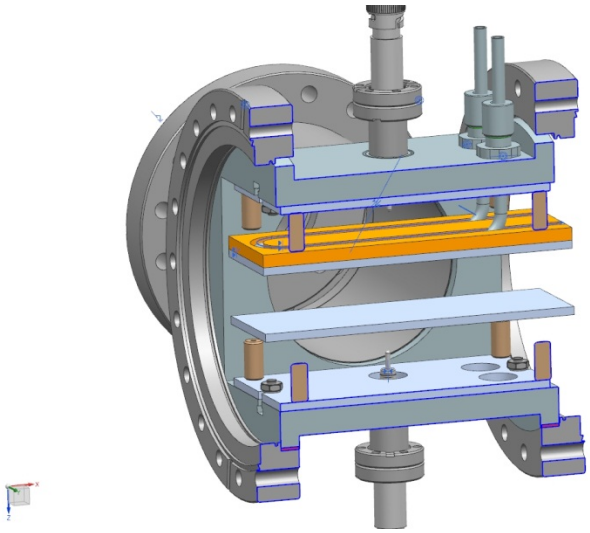

- Chopper
  - Vacuum pumping needs
    - Requires about 1000 l/s pumping capacity
    - This may impact space requirements
  - Feedthroughs are specified
  - Standoff requirements determined
  - TZM
    - Needs to be procured
- Toroid
  - This device is in house and selected by the Instrumentation Dept.
  - We may have the required ceramic in-house
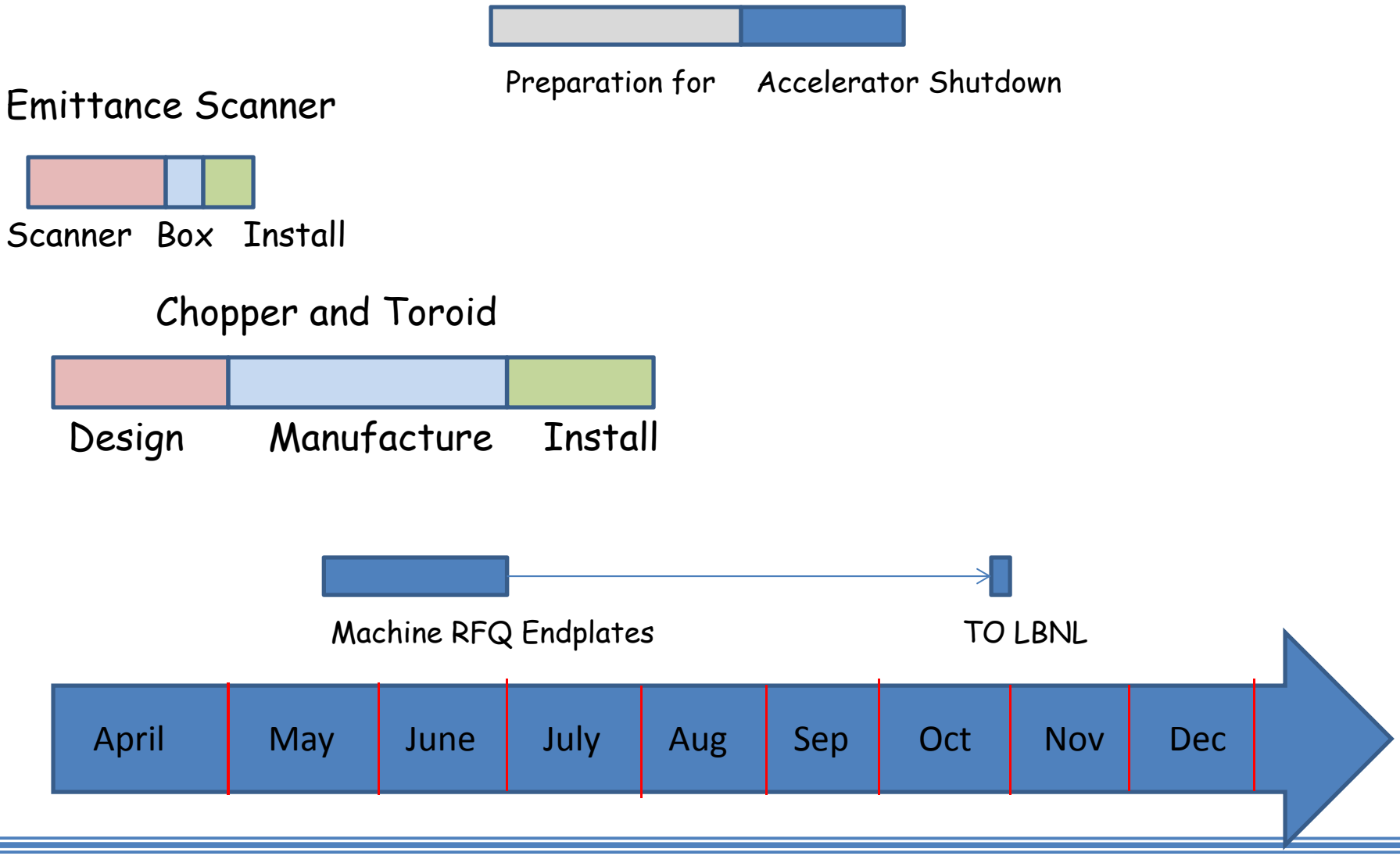
Completion Plan