Beam Current Measurement Systems for LEBT and Early MEBT

Vic Scarpine and Aisha Ibrahim

Mach 18, 2014

Outline

- The playing field
- LEBT current diagnostics
- MEBT current diagnostics
- Current measurement issues
- Beam toroids for high-duty cycle beams
- Calibration issues
- Summary

The Playing Field

Provide adequate beam current measurements to commission, operate and characterize the LEBT and RFQ

- Functional beam current measurement requirements:
  - 1 to 10 mA H- beam
  - LEBT: DC beam
  - After LEBT chopper: 1 μs to 1 ms (to 8 ms), 60 (and 120 Hz)
    - 8 ms at 120 Hz → 96% beam duty factor
  - Absolute accuracy: 1% - with averaging
  - Resolution: 0.3% - with averaging
- Standard Instruments:
  - DCCTs, toroids, RWCM, (BPMs)
  - Faraday cups for commissioning
- Issues:
  - Tight functional requirements
  - Limited money, manpower and beam-line space

LEBT Beam Current Instrumentation

LEBT Beam Current

- DCCT
  - Unchopped Beam Current
- Toroid
  - Chopped Beam Current
- Isolated diaphragms
  - Beam tails
  - Beam steering
- Faraday Cup (commissioning)
- DAQ
  - Presently HRMs & scopes
  - Upgrade to ADC/FPGA board when toroids installed

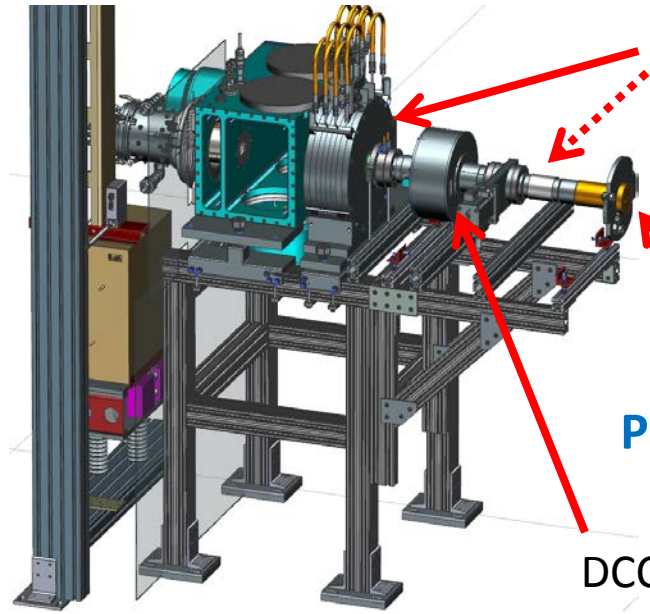

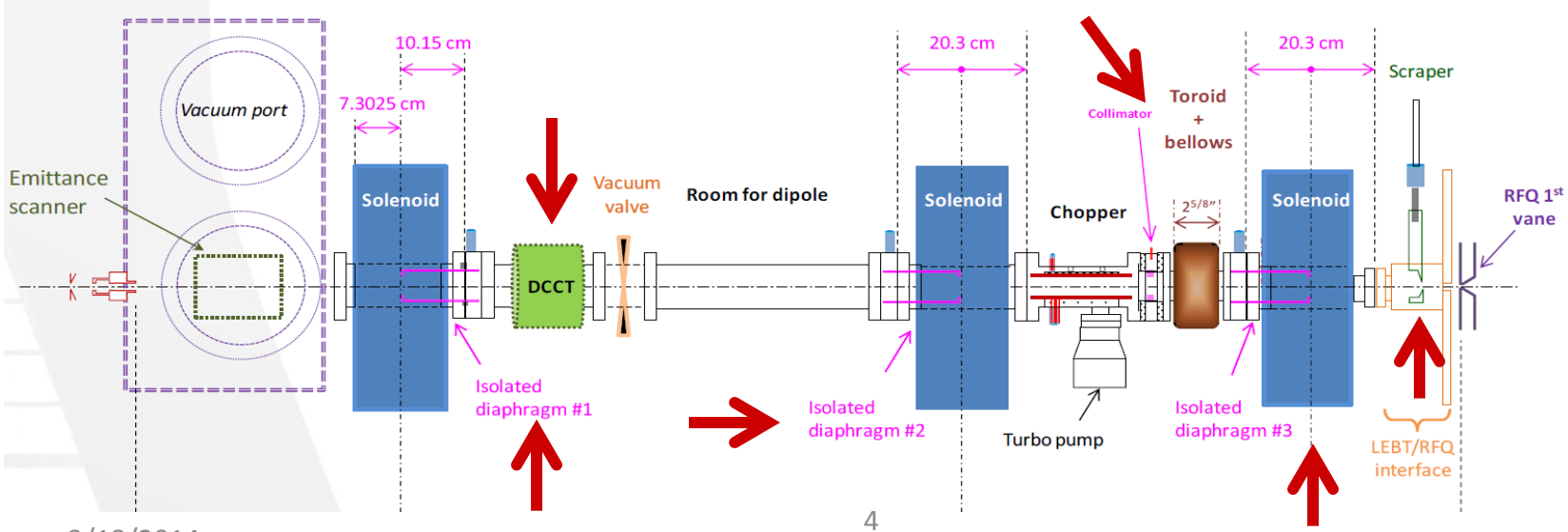

Some LEBT Current Measurement Issues

- DCCT
  - Old Bergoz DCCT
    - Black box
  - Hysteresis issues
- Isolated Diaphragms and Faraday Cup
  - HV biasing
    - Positive and/or negative biasing
  - Secondary particle loss or capture ($H^- \rightarrow H^0$ + e-, etc)
    - Soft charged particle trapping in solenoid fields
- Beam toroid
  - Secondary particle scatter from chopper or solenoid #3 isolated diaphragm
  - Chopper fields
    - Effect seen in linac chopper

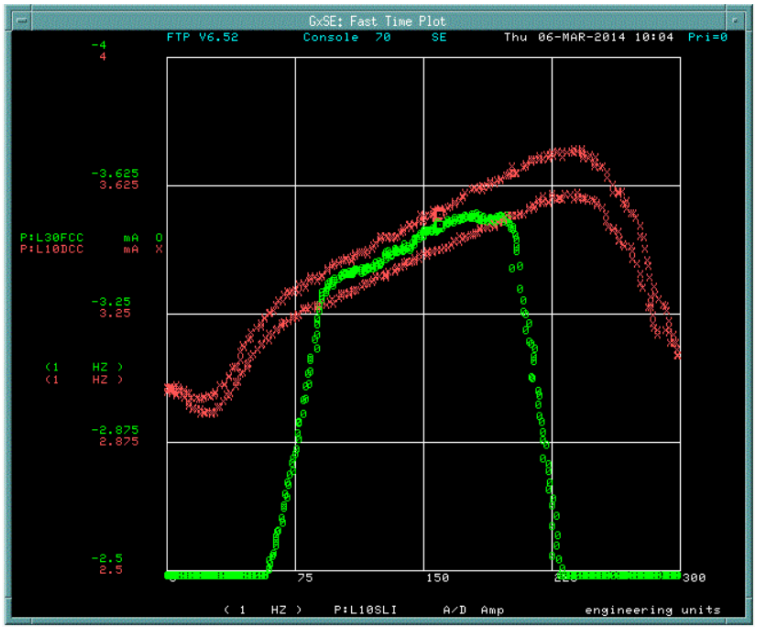

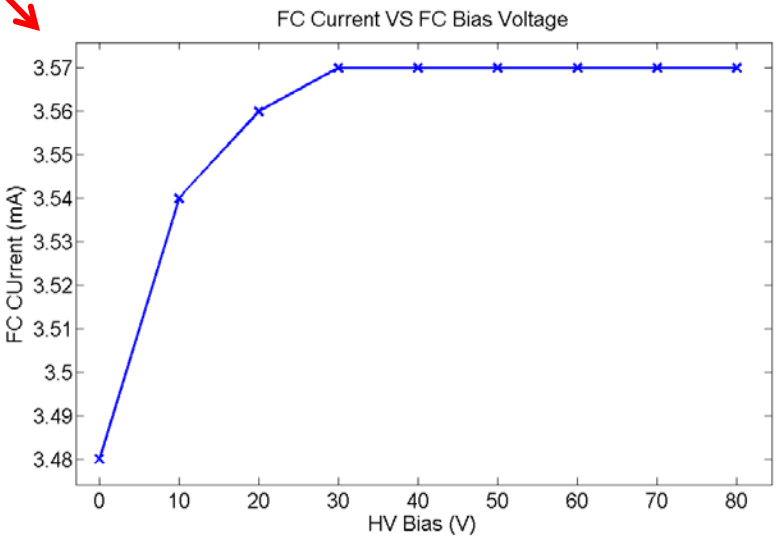

Bergoz DCCT

- Absolute Accuracy : +/- 0.1% FS or +100uA
- Resolution : 10uA rms
- Linearity error : <0.1%FS
- Ripple rms : <0.2% FS
- Bandwidth : DC – 4.2KHz
- Temperature drift : <1uA/K
- Sensor must be protected to be heated beyond 80°C

- Magnetic Stray field Sensitivity :
  - 100uA/G with 20G saturation
  - Sensors are sensitive to the magnetic field even with shielding, but shielding minimizes absolute error, long-term drifts, and remnant magnetization of saturated cores

DCCT Shielding Options:

- Fully-enclosed shield around sensor and gap protects from RF interference
- Copper foil and a layer of polyester film can be used over the ceramic gap to reduce the low-frequency signal leakage
- Magnetic shielding in layers to protect the sensor

Proposed MEBT Diagnostics

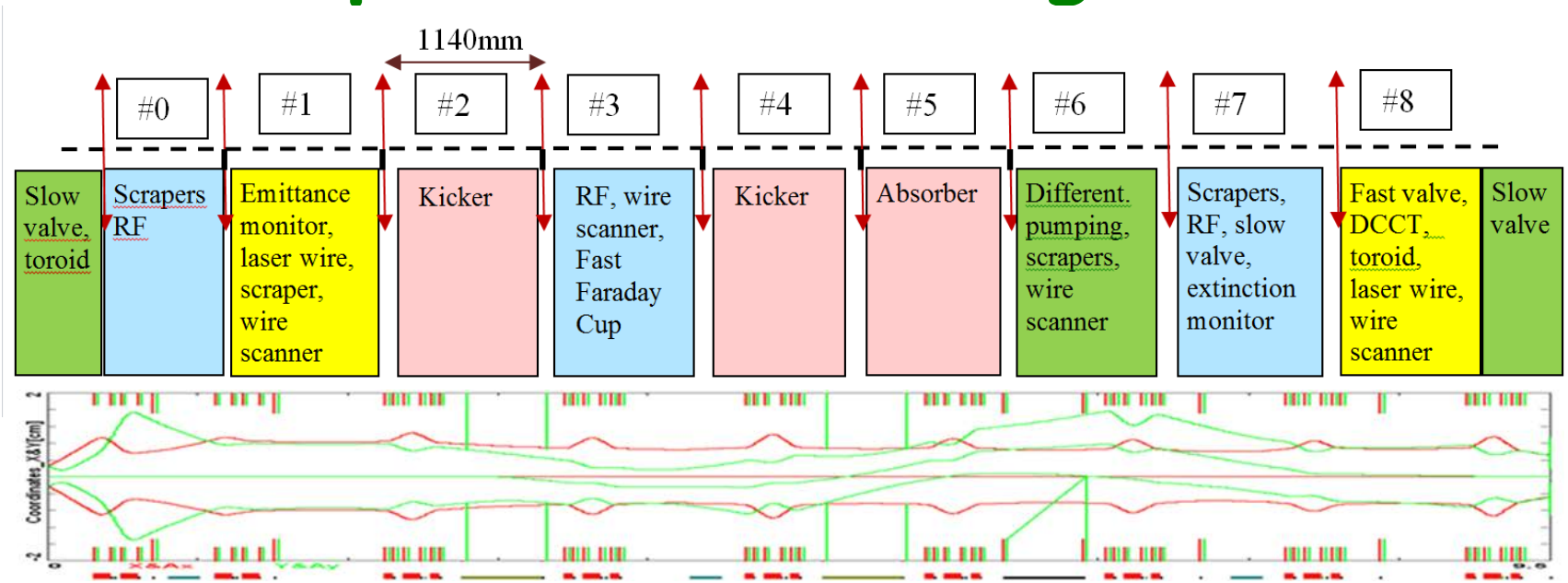

- Beam Current – Toroid, RWCM, DCCT, (BPMs)
  - Initial only toroid at output of RFQ
- Functional requirement:
  - Maximum discrepancy between LEBT and MEBT toroids of 1% (with averaging)

RFQ Commissioning Plan (stolen from Sasha)

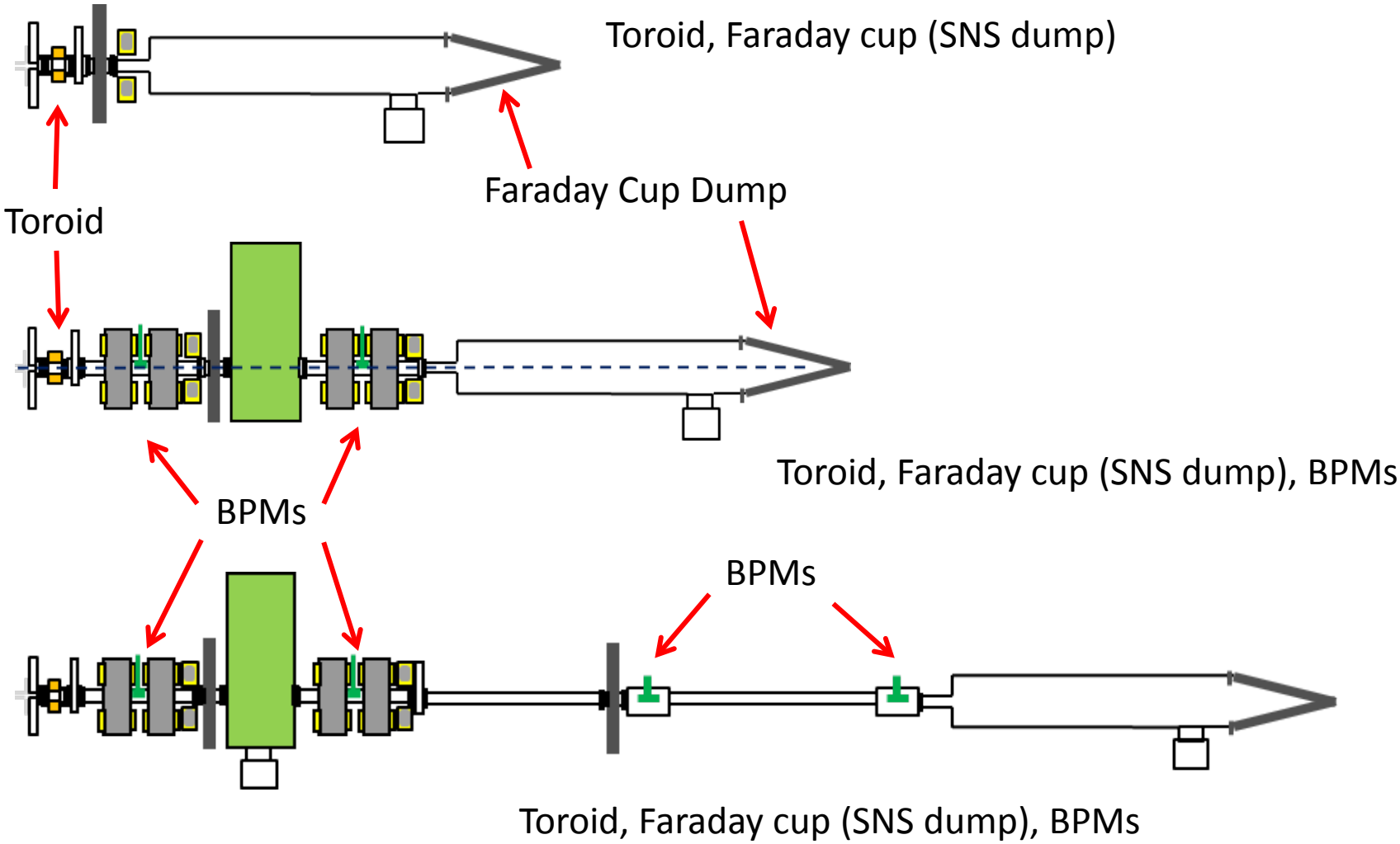

RFQ Beam Current Measurements

- Requirements:
  - 1 μs to 1 ms (to 8 ms), 60 (and 120 Hz)
  - Maximum discrepancy between LEBT (RFQ in) and MEBT (RFQ out) beam current measurements of 1% (with averaging)
- Large bandwidth → three core DCCT
  - No beamline space and no money and no manpower
- Can we make toroids work with high duty factor beam to 1% relative accuracy?
  - Notch the beam → Example: 100 μs off at 120 Hz?
    - Working with FRIB

Toroid Options

- Vendors: Bergoz, Pearson, Fermilab
- Limitations: Beam line space, money and manpower
  - Drives us toward Pearson toroids
    - Lowest cost, small foot print available, Fermilab experience
    - Which Pearson toroid?
  - Select same toroid model for LEBT and MEBT
    - Reduce systematics
  - Size, sensitivity, droop rate, aperture drives toroid selection
  - Two possible candidates:
    - Pearson 7655 toroid or Pearson 8589 toroid

Pearson 7655 Toroid

- *Standard Toroid*
- *Sensitivity: 0.1 Volts per Amp +/- 1%*
- *Droop rate: ~ 7% per millisecond*
- Low Freq 3 dB point: ~ 10 Hz
- High Freq 3 dB point: ~ 4 MHz
- Split core design

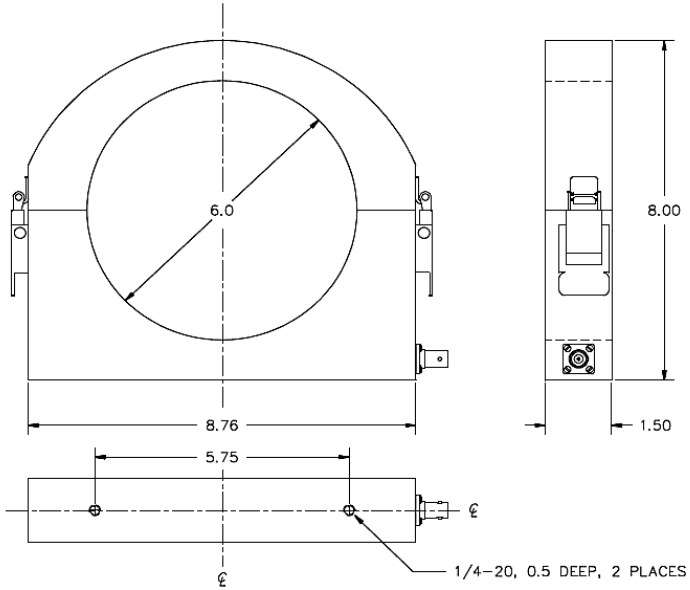

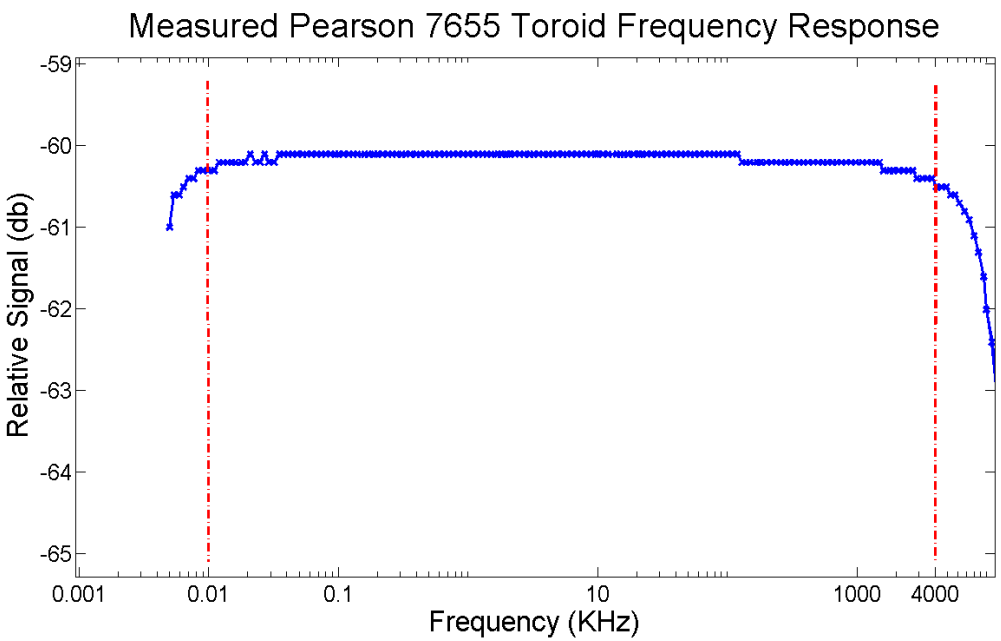

Pearson 8589 Toroid

- *Custom design for Fermilab*
- *Sensitivity: 0.5 Volts per Amp +/- 1%*
- *Droop rate: ~ 4% per microsecond*
- Low Freq 3 dB point: ~ 40 Hz
- High Freq 3 dB point: > 20 MHz
- Solid core design
- Same size as 7655

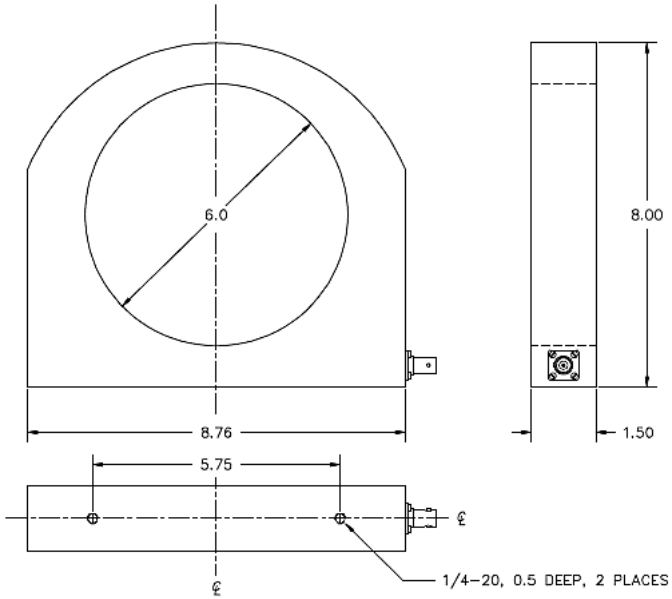

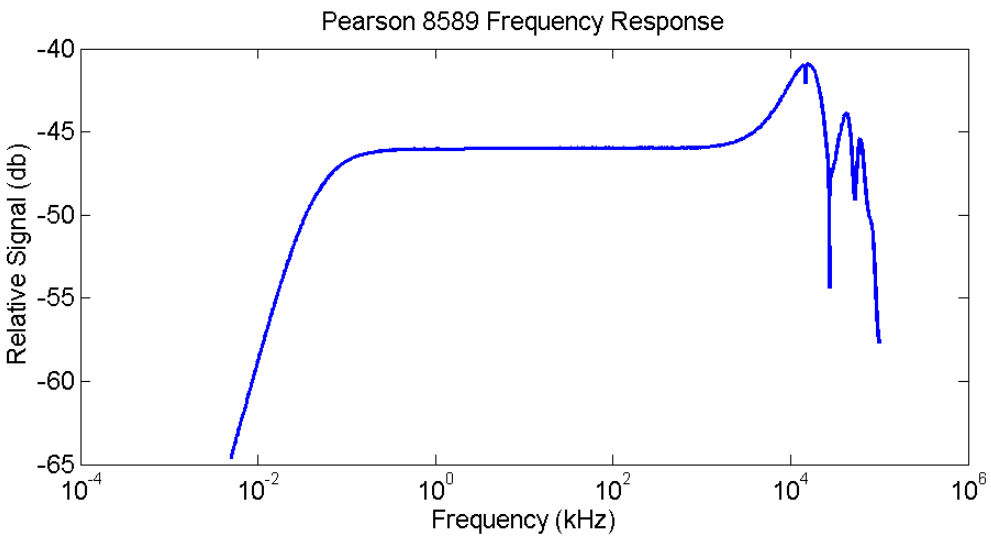

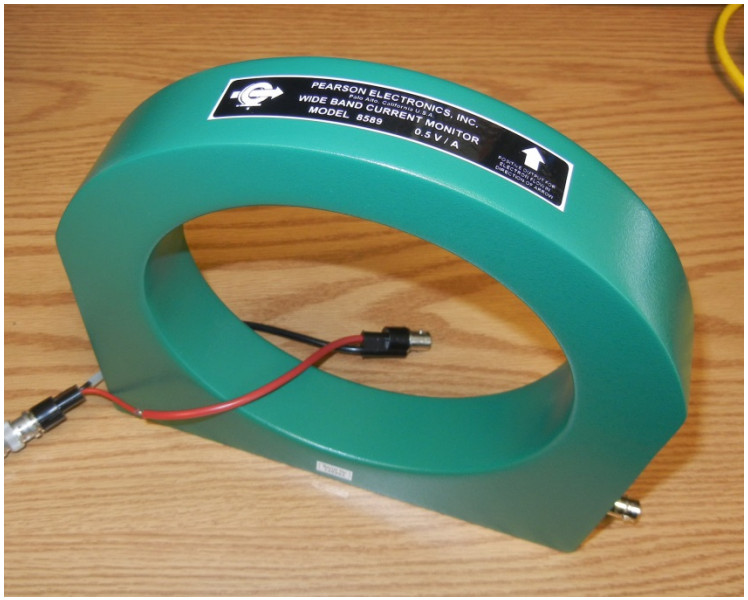

Short Pulse Length Response

Channel 1 (yellow) input

- 1 μs pulse with 100 ns rise and fall times
- 60 Hz rep rate
- 100 mA current

Channel 2 (blue): toroid output

- Both toroids seem adequate for short pulses
- Give advantage to 8589 with greater sensitivity

7655 – less sensitivity, less droop

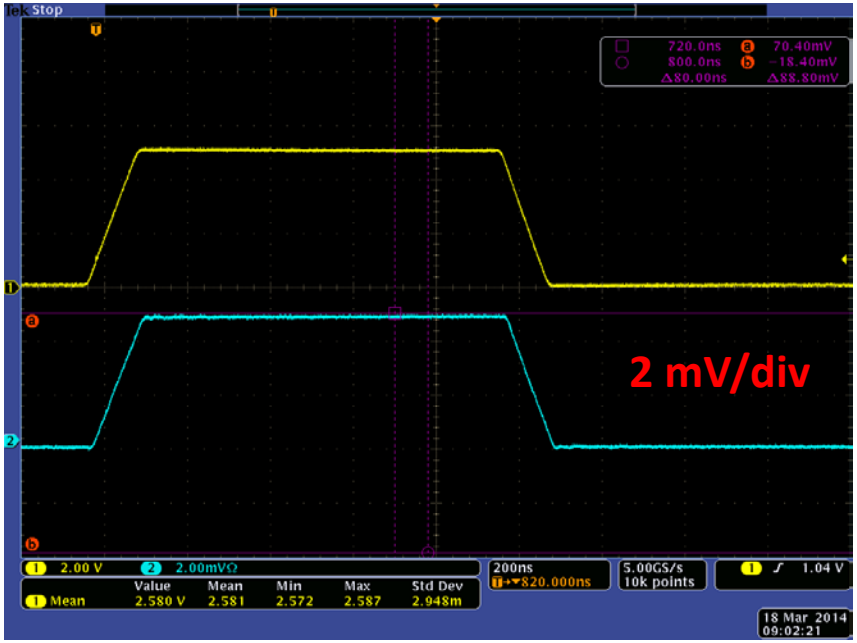

8589 – more sensitivity, more droop

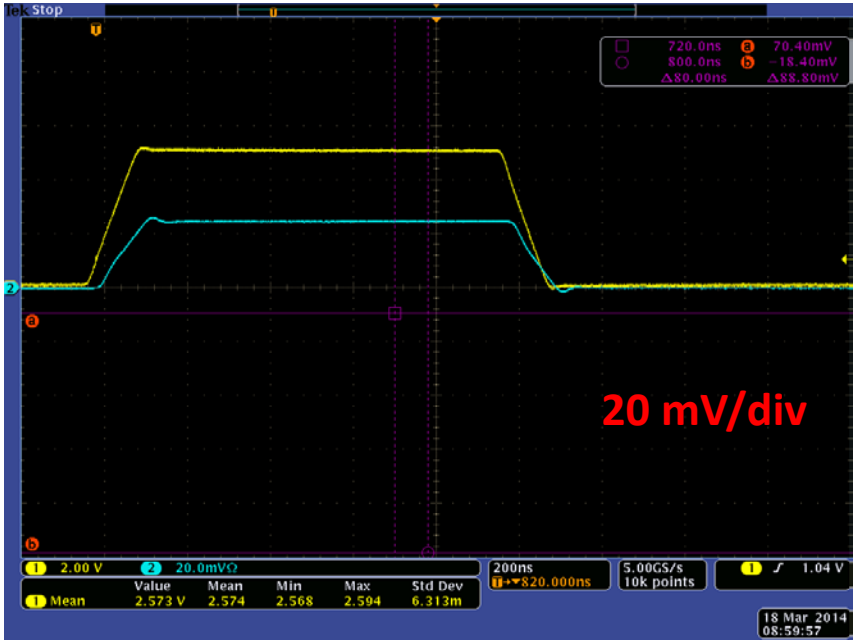

Medium Pulse Length Response

Channel 1 (yellow) input

- 1 ms pulse
- 60 Hz rep rate
- 100 mA current

Channel 2 (blue): toroid output

- 7655 has better pulse reproducibility
- 8589 has better baseline response and more signal
- Slight advantage to 8589
  - Baseline response

7655 – less sensitivity, less droop

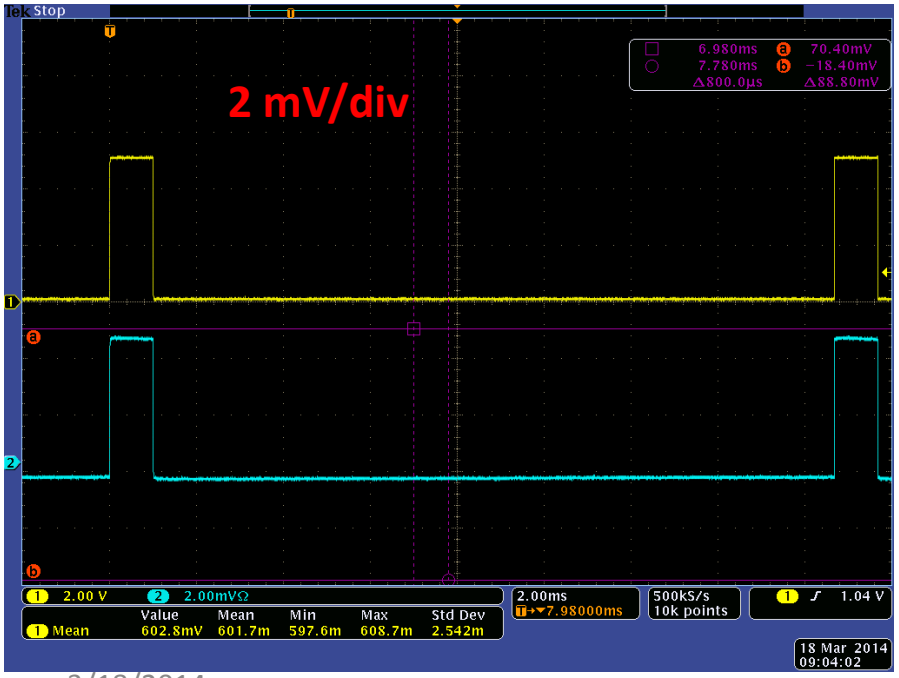

8589 – more sensitivity, more droop

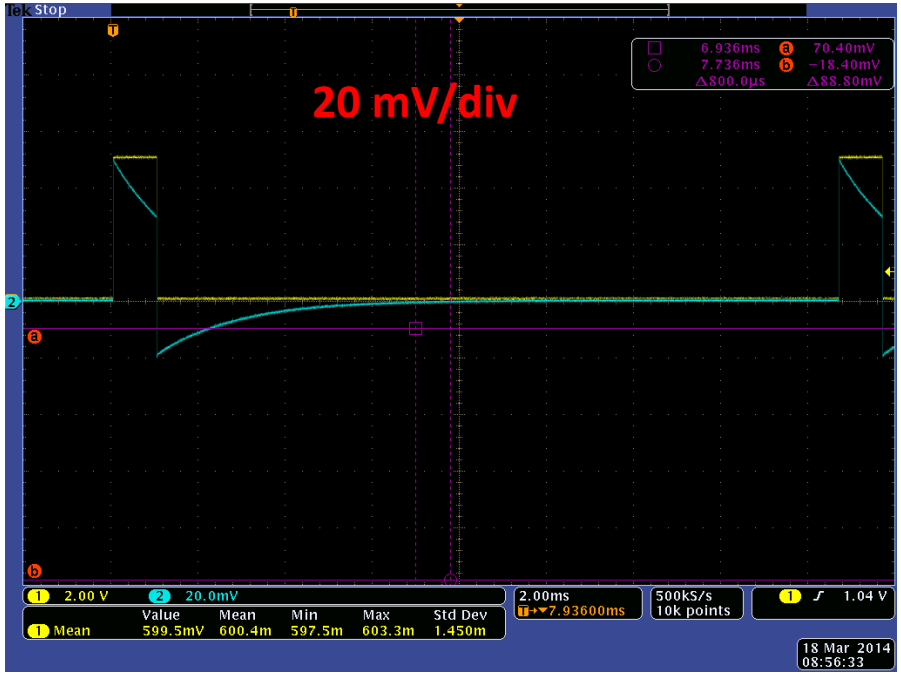

High Duty Factor Response

Channel 1 (yellow) input

- 9 ms pulse
- 10 ms pulse spacing
- 90% duty factor
- 100 mA current

Channel 2 (blue): toroid output

- Both toroids have issues with baselines
- No advantage???
  - Droop over sensitivity or visa versa?

7655 – less sensitivity, less droop

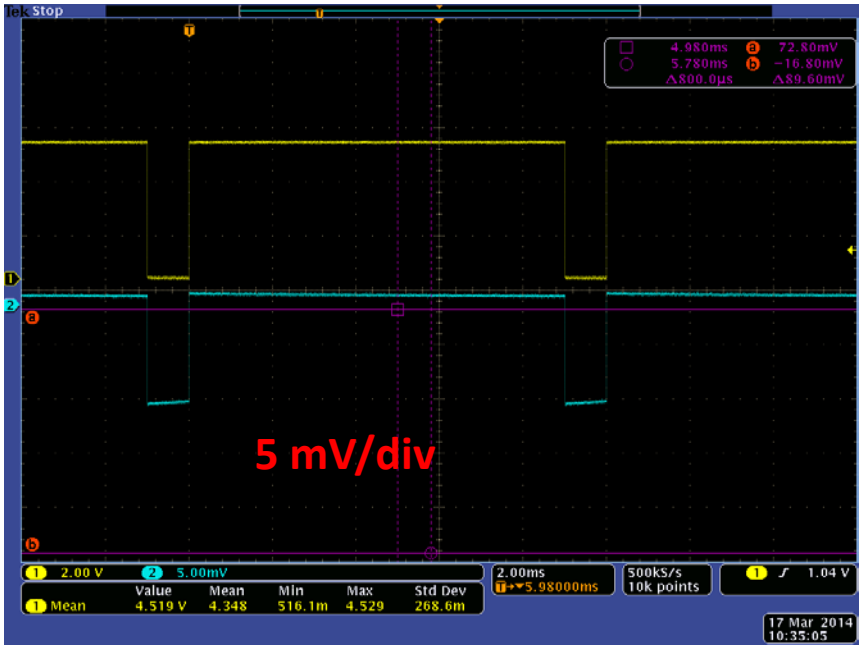

8589 – more sensitivity, more droop

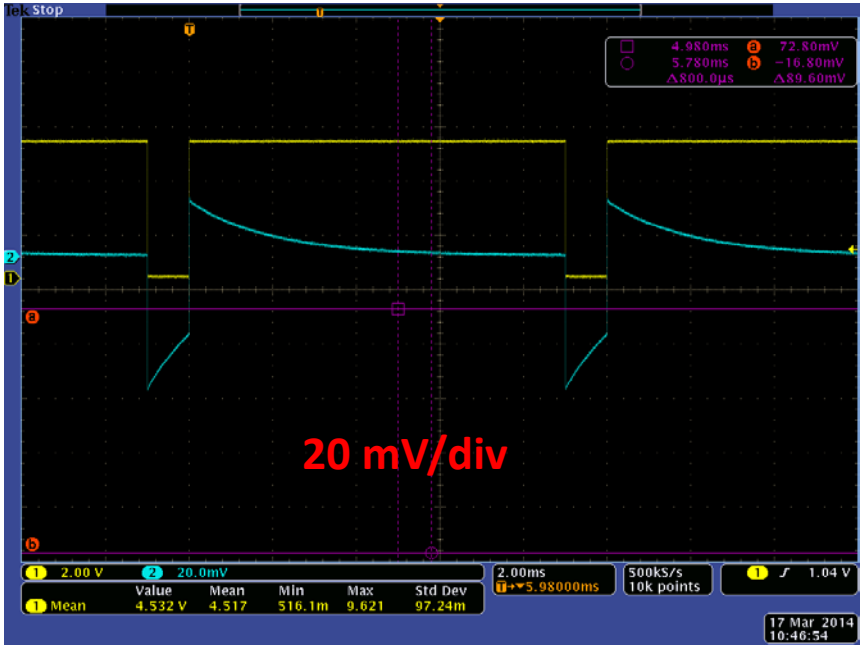

High Duty Factor Response with Active Feedback

Channel 1 (yellow) input

- 7 ms pulse
- 8 ms pulse spacing
- 87.5% duty factor
- 100 mA current

Channel 2 (blue): toroid output

Feedback has x20 gain

- Active feedback drops the low-frequency response
- Better reproducibility of pulse shape
- Baseline issue for both toroids?

7655 – less sensitivity, less droop

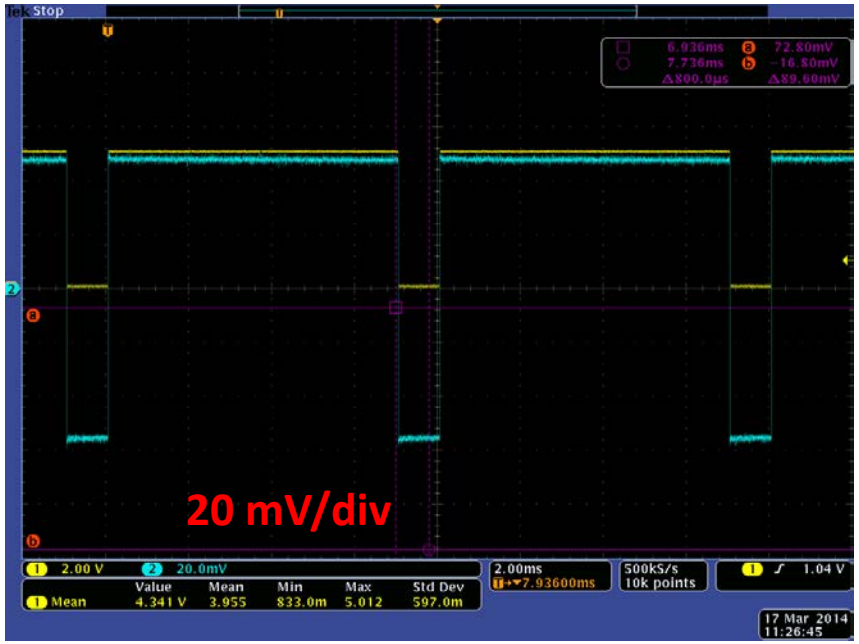

8589 – more sensitivity, more droop

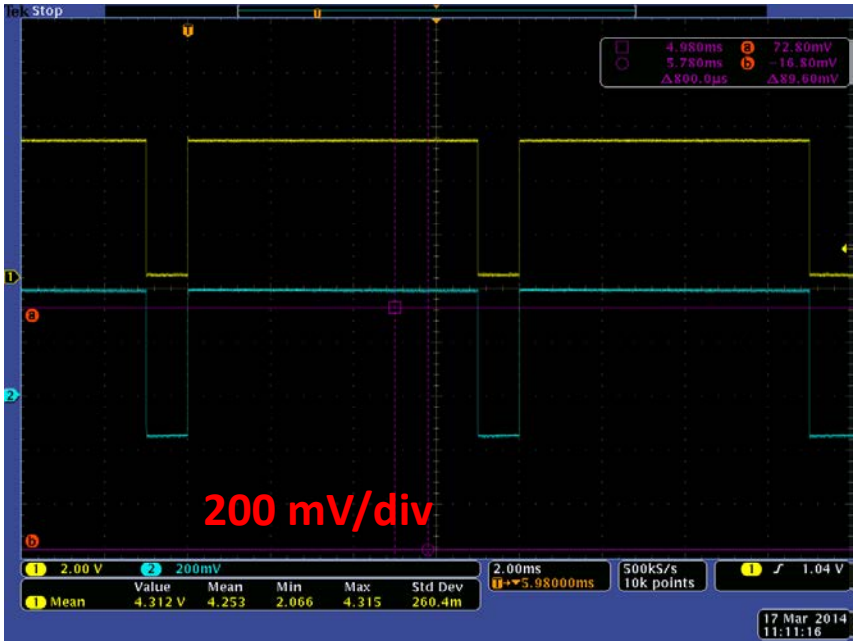

High Duty Factor Response with Active Feedback

<u>Toroid Output Signals</u>

Input pulses:

- 1, 4, 6, 7, 7.5, 7.9 ms pulses
- 8 ms pulse spacing
- 100 mA current

Feedback has x20 gain

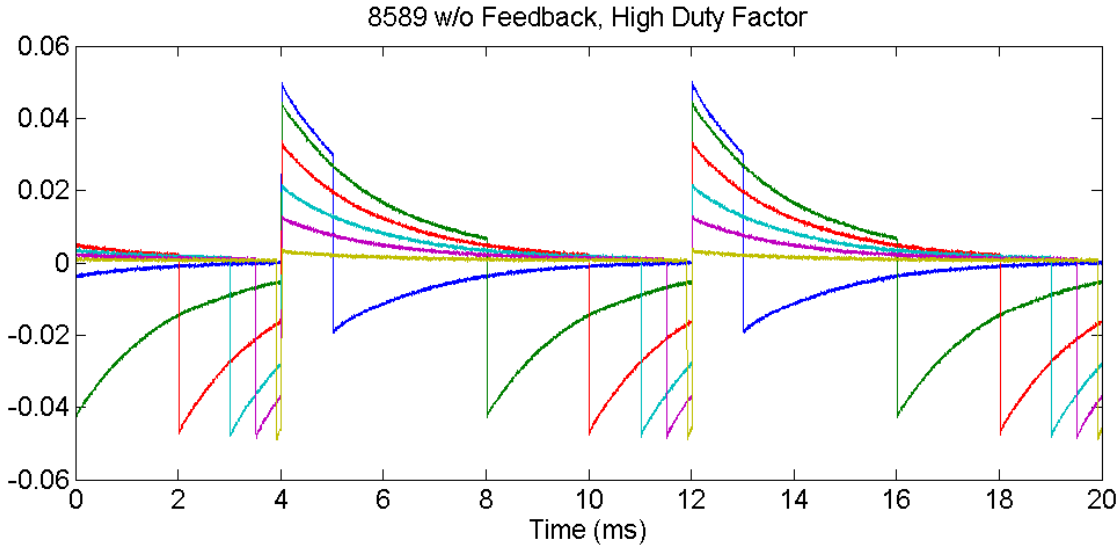

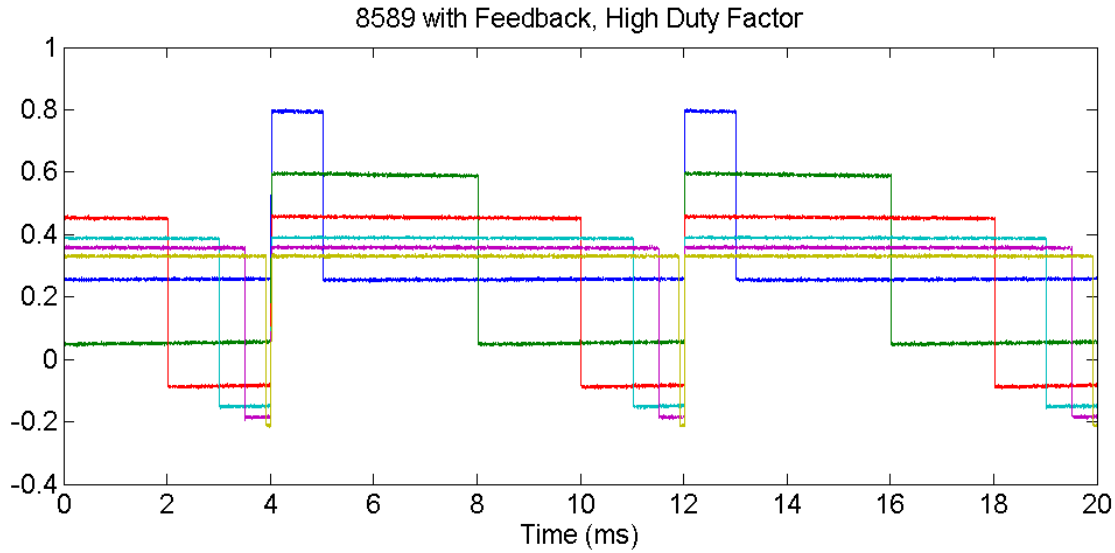

Toroid Droop and Baseline

- Ways to Correct for Droop
  - Toroid selection – tradeoff between size, droop, and sensitivity
  - Place toroid output into an active feedback circuit
  - Allow digitizer to correct for droop with FIR algorithm
- Ways to Correct for Baseline
  - Analog solutions to external coupling
    - common mode chokes
    - offset adjust in preamps
  - Digital solutions to external coupling and duty factor effects
    - average baseline preceding beam pulse
      - Won't work for high duty factor beam

Issues for 1% Relative Accuracy

- Accuracy of calibration source
  - depend on equipment used and mode operated in
  - 0.5% change in gain for 1% change in output termination accuracy
  - Output impedance of source needs to verfied to <1%
- "Identical" signal paths for two toroids
  - Time-dependent changes to cables, electronics, etc
  - Time-dependent effects in accelerator
    - Magnetic fields, RF, etc
- NUMI example:
  - systematic errors are less than 1% and the measurements are stable to about 0.5% (repeatibility)

Issues for 1% Absolute Accuracy

- Temperature Sensitivity of CT : +0.02%/ºF
- Temperature Sensitivity of VME crate electronics
- Vendor V/A Accuracy of CT: ~ ±1% or better
- Magnetic Field Sensitivity of CT
- Issues specific to line configuration/grounding:
  - AC coupled noises sources induced in shielding on cables
  - Stray sources inducing “beam-like” responses into ct output
- Issues related to current measurements
  - Dynamic range/resolution of electronics
  - Signal processing algorithm/ digital filter
  - Integration window
  - Pulse width calculation depended on noise, ringing, and shifts in baseline
- Averaging helps with uncorrelated noise but not systematic effects

Summary

- LEBT current devices being used
  - DCCT issues → hysteresis --> shielding
  - HV bias for FC and isolated diaphragms
- LEBT and MEBT toroids
  - Two possible Pearson toroids
  - Techniques for short pulses (1 μs to 1 ms @ 60 Hz) understood
  - Techniques for high duty factor beams under study
    - Working with FRIB (Bob Webber)
  - 1% relative accuracy between toroids appears within reach
    - Unknown systematics
  - 1% absolute accuracy is our goal