BPMs for the High-Energy End of PIP-II Linac

- BPM for each focusing element in linac
- For HWR, SSR1 and SSR2, BPMs are embedded in cryomodules
- For LB650 and HB650, focusing elements are between cryomodules
  - BPM embedded in each focusing element
  - BPMs for 650 section will be four button BPM similar to MEBT BPM designs
- RMS bunch length ~ 4 ps

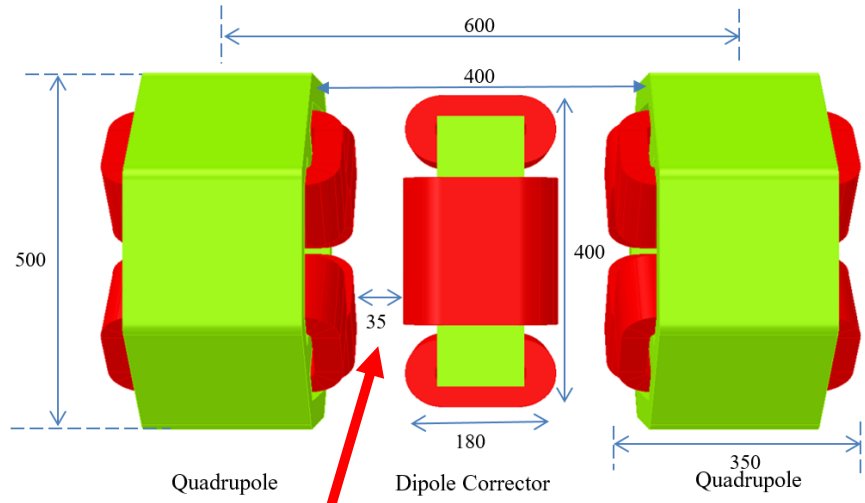

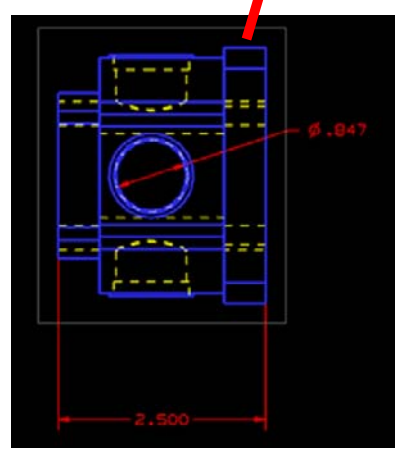

Four-button BPM
- 21 mm buttons

Signal Level Expected from BPM output

Simulated using CST PIC solver

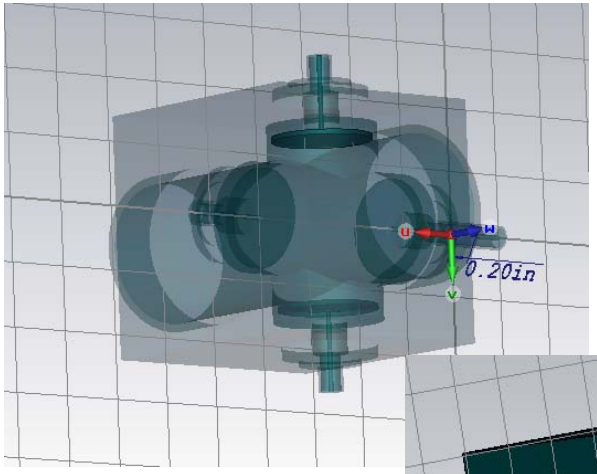

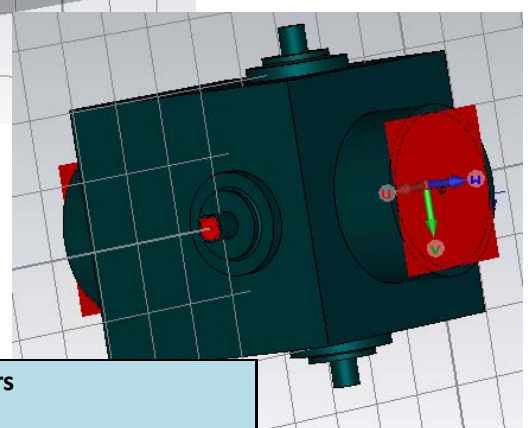

Input (example)

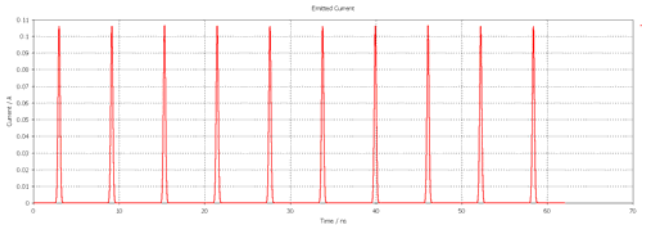

Output – peak signal detected at BPM output (broadband)

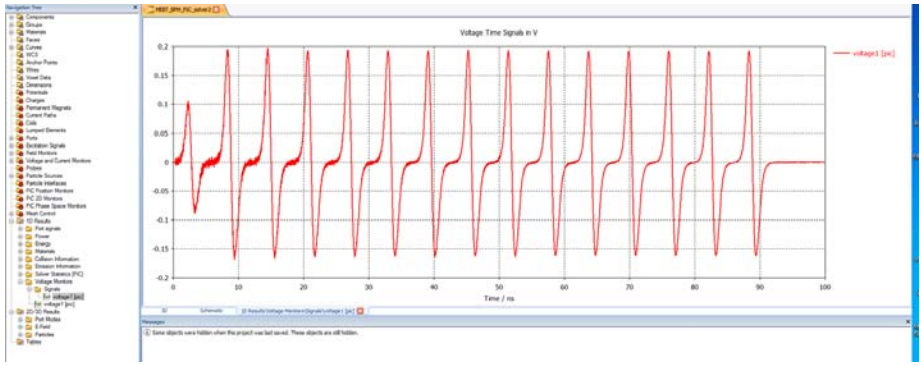

Input Parameters				
rms bunch length (psec)	# protons*	Charge (C)	Bunch Frequency (MHz)	β
120	2.E+08	3.2E-11	162.5	0.067
17	2.E+08	3.2E-11	162.5	0.55
10	2.E+08	3.2E-11	162.5	0.76
4	2.E+08	3.2E-11	162.5	0.84
* equivalent to 5mA beam				

BPM Electronics - Simulation with and without cable

Simulated using Agilent ADS

Input Parameters					CST results		ADS results					
							Input Parameters (from CST)		No cable included		Cable included	
rms bunch length (psec)	# protons*	Charge (C)	Bunch Frequency (MHz)	β	Emission Peak (A)	Vpk output (V)	Vpk input from CST (mV)	Power @ 162.5MHz (dBm)	Amplifier Gain (dB)	Pout at 162.5MHz (dBm)	Amplifier Gain (dB)	Pout at 162.5MHz (dBm)
120	2.E+08	3.2E-11	162.5	0.067	0.107	0.02	20	-34.97	42	**4.6**	42	**-2.8**
17	2.E+08	3.2E-11	162.5	0.55	0.75	0.09	90	-56.46	42	**-12.3**	42	**-20.7**
10	2.E+08	3.2E-11	162.5	0.76		0.14	140	-54.71	42	**-15.2**	42	**-22.6**
4	2.E+08	3.2E-11	162.5	0.84	3.2	0.2	200	-55.64	42	**-16**	42	**-23.4**

* equivalent to 5mA beam

According to these results, signal in HEBT is expected to be around 20dB lower than in MEBT.

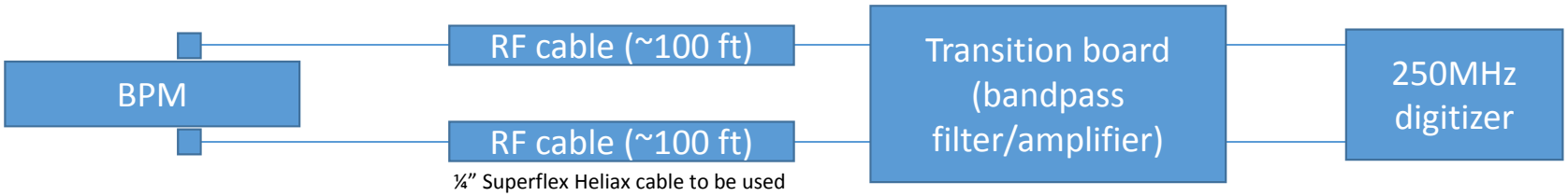

Simulation without cable

120 psec

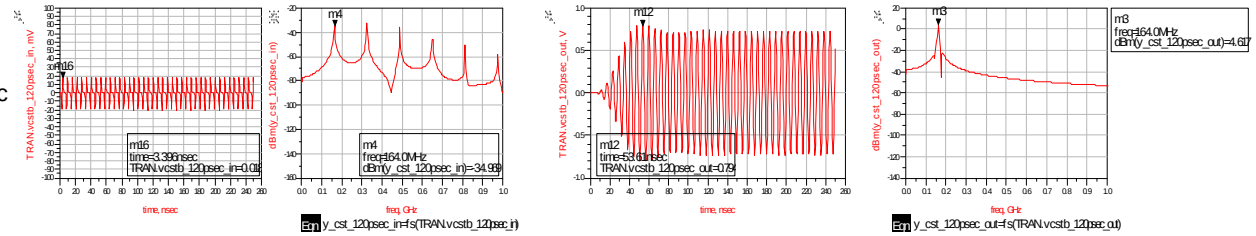

17 psec

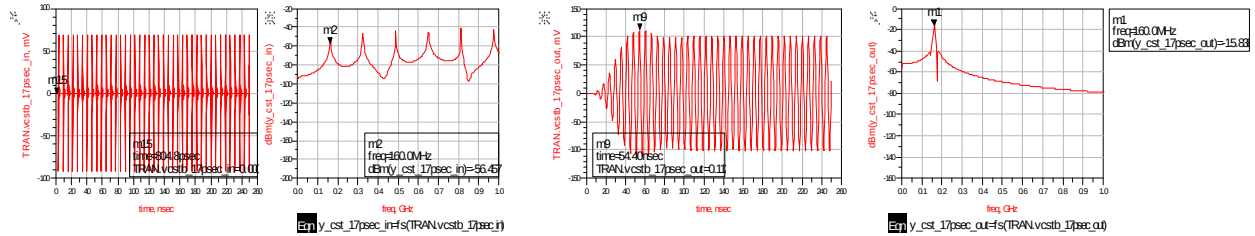

10 psec

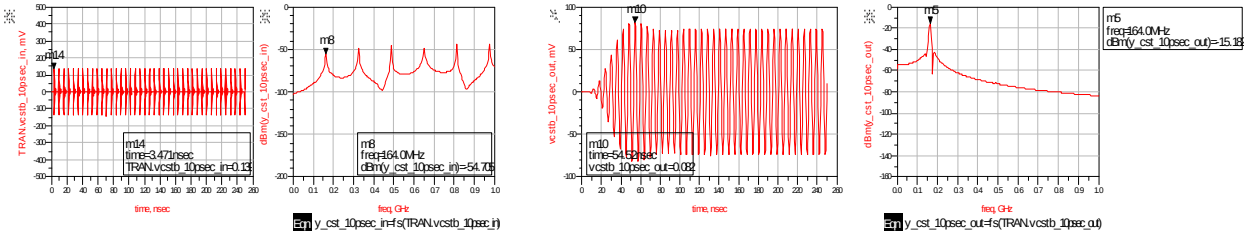

4 psec

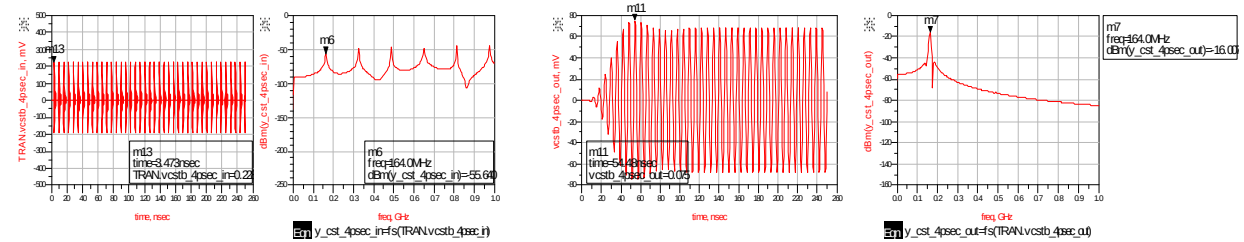

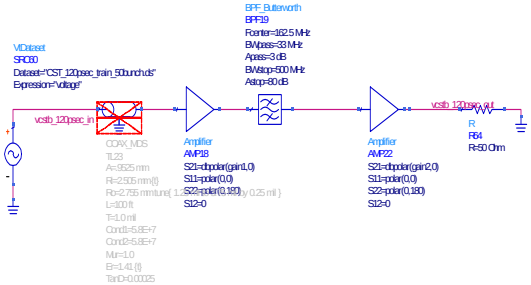

BPM Electronics - Simulation *with* cable

120 psec

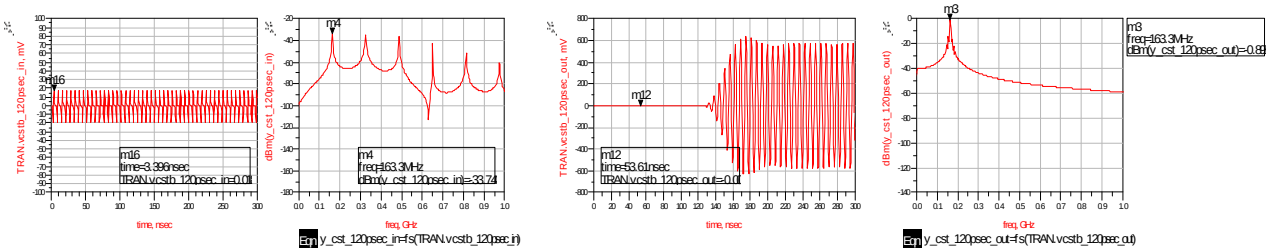

17 psec

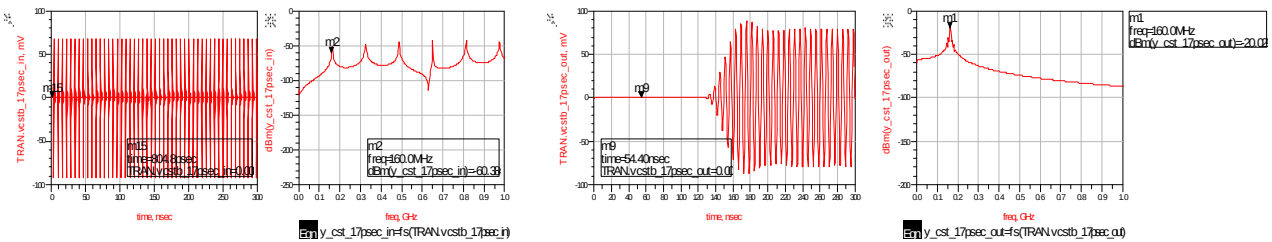

10 psec

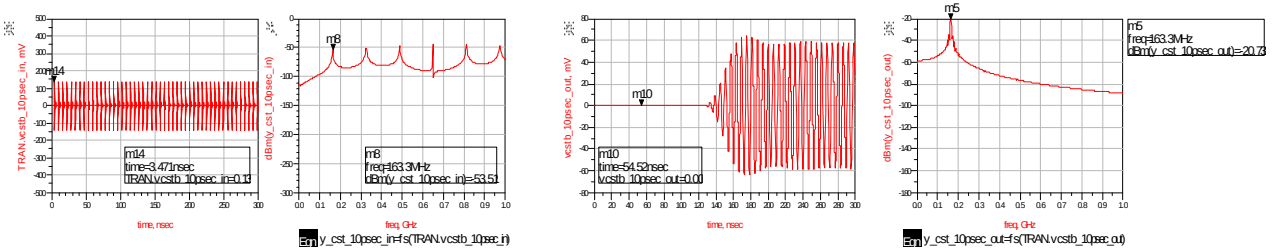

4 psec

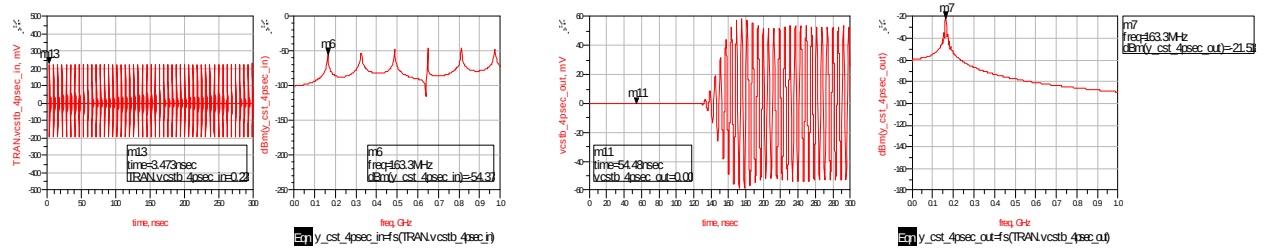

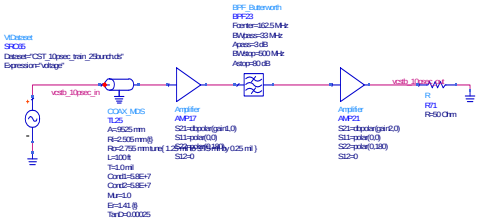

Summary

- Results are preliminary and work is still in progress
- BPM electronics should work similar to that used in MEBT
  - Extra 20dB gain would be needed
  - Signal to noise to be better understood

Back-up slides
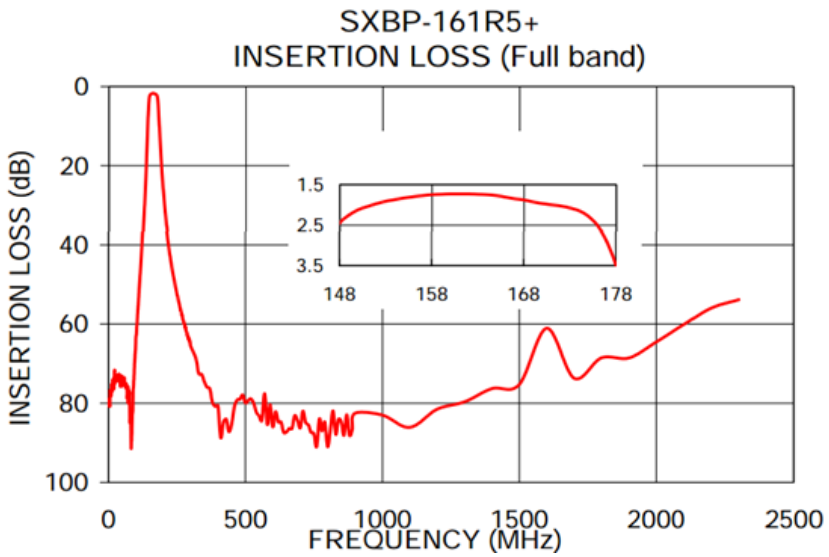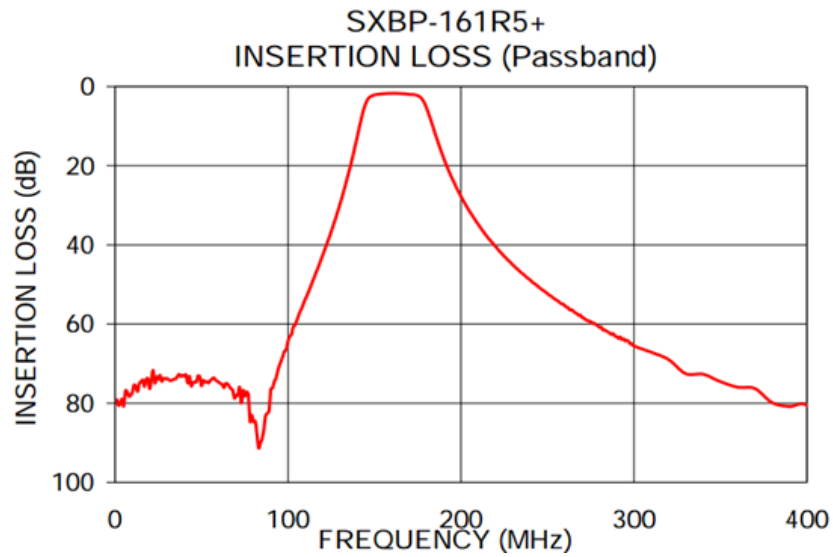
BPM Electronics - filter