PIP II Cavity Processing and Testing during LCLS II Production

Allan Rowe

July 8, 2014

Conclusions

- Adequate resources must be applied to cavity processing and testing activities to prepare all PIP II cavity types.
- LCLS II will dominate cavity processing and testing efforts and capacity through 2018 especially without additional resources and facility capabilities.
- ANL SCSPF has flexibility to proceed with PIP II tasks in CY2015 and scattered throughout production through 2018.
- CPL at FNAL can handle no PIP II processing tasks.
- PIP II requires an adequately sized and outfitted cleanroom to process the suite of cavities.
- Significant tooling is still needed for PIP II cavity variants now.
- VTS 2&3 insert completion and cavity handling tooling are necessary for PIP II cavity testing.
- Significant dedicated effort is necessary to accomplish designs and facility improvements and development. (minimum 1.5 FTE engineers, 1.5 FTE drafters, + procurement, inspection, etc. support.)

Outline

- LCLS II R&D and Production Processing Overview
- LCLS II Production Processing and Testing Demand
- LCLS II 1.3 GHz and 3.9 GHz Processing Recipe Review
- PIP II Cavity Processing and Testing Capacities
- PIP II Cavity Processing and Testing Readiness
- Required Processing Infrastructure for PIP II
- Other Cavity Processing and Testing Activities
- Processing Effort (rough FTE analysis)
- Conclusions
- Backup Slides

Overview of LCLS II Cavity R&D Processing and Testing

- Current R&D Activities
  - 1.3 GHz High Q0, Design Verification
    - Remaining tasks by end of CY2014
      - High Q0 VTS: ~10-15 more VT cycles probable
        - Magnetic field studies
        - Frozen High Q0 recipe statistics
      - HTS Cavity Preparations: 7 HTS cycles
    - Current Facility Demand
      - SCSPF ~75%
      - CPL ~50%
- Upcoming 3.9 GHz R&D
  - High Q0 studies
    - FY2014 into CY2015
    - ~10 VT cycles—still to be approved by SLAC
  - Final recipe development for production at FNAL
  - Work will partially occupy SCSPF and CPL

LCLS II Production Processing and Testing Demand

- 2-year Production ending 2018
- ~140 1.3 GHz Cavities
- ~18 3.9 GHz Cavities
- ~221 Vertical Tests total including reprocessed cavities
- Average 2 cavities/cryocycle, 110 total VTS cryocycles
- ~84 cryo cycles/year available at VTS, 164 during production
- LCLS II will occupy 67% of VTS cryo cycles during production
- 1.3 GHz Reprocessing Cycles
  - Average ~0.5 / week. Highly variable based on XFEL experience.
  - ANL Reprocessing Capacity: 1.5 cycles/week on dressed cavities
  - LCLS II 1.3 GHz reprocessing occupies 33% of available processing capacity at ANL
- 3.9 GHz Production (< 1 year, 2nd year of production end of CY2017)
  - 18 full cycles, 5 reprocessing
  - ANL Capacity for 3.9 GHz = 1.5/week during 1.3 GHz reprocessing
  - LCLS II 3.9 GHz occupies minimum of 50% of available processing capacity at SCPF depending on production duration

LCLS II 1.3 GHz Cavity Processing and Testing Sequence

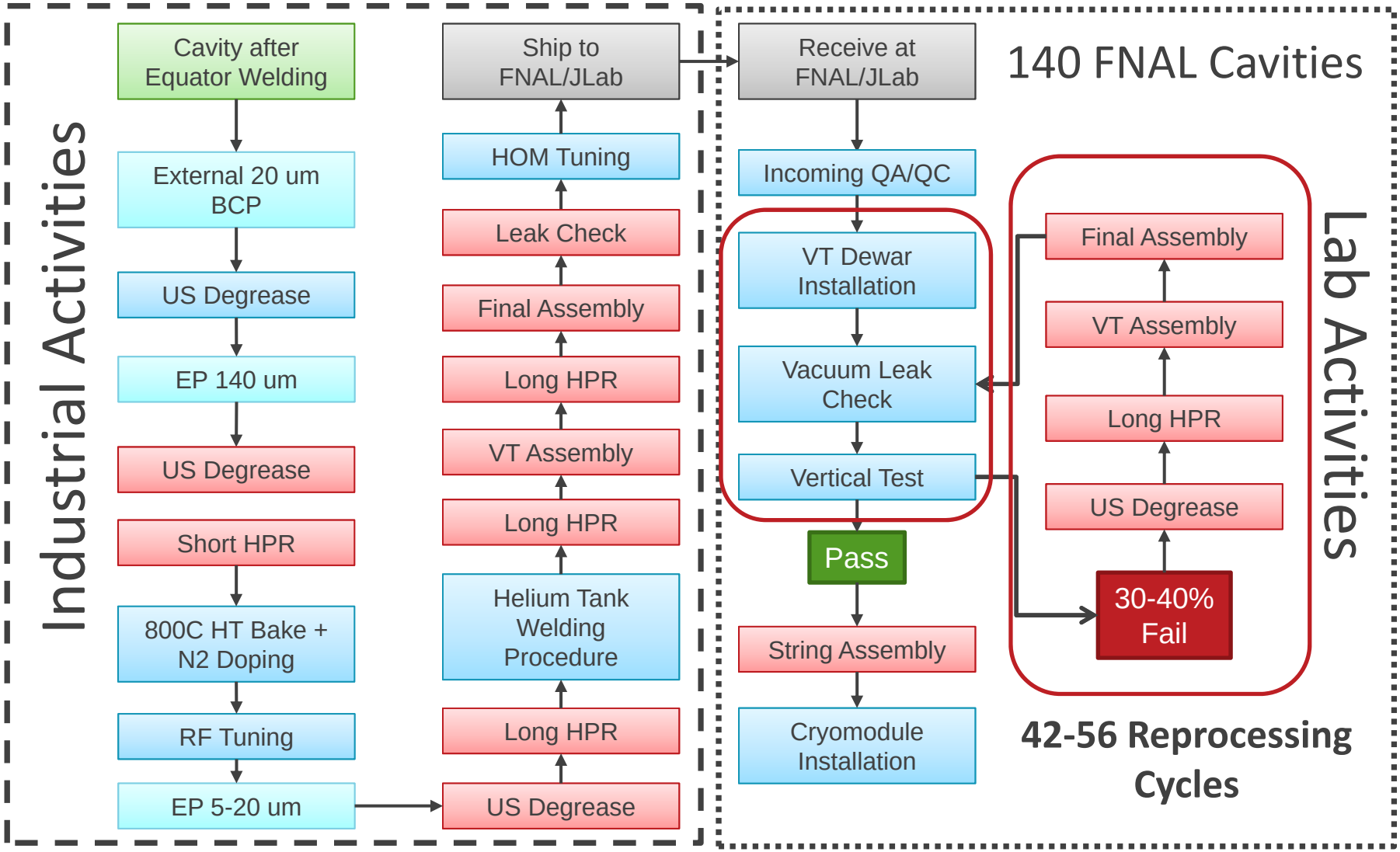

LCLS II 3.9 GHz Production Recipe – 18 cavities

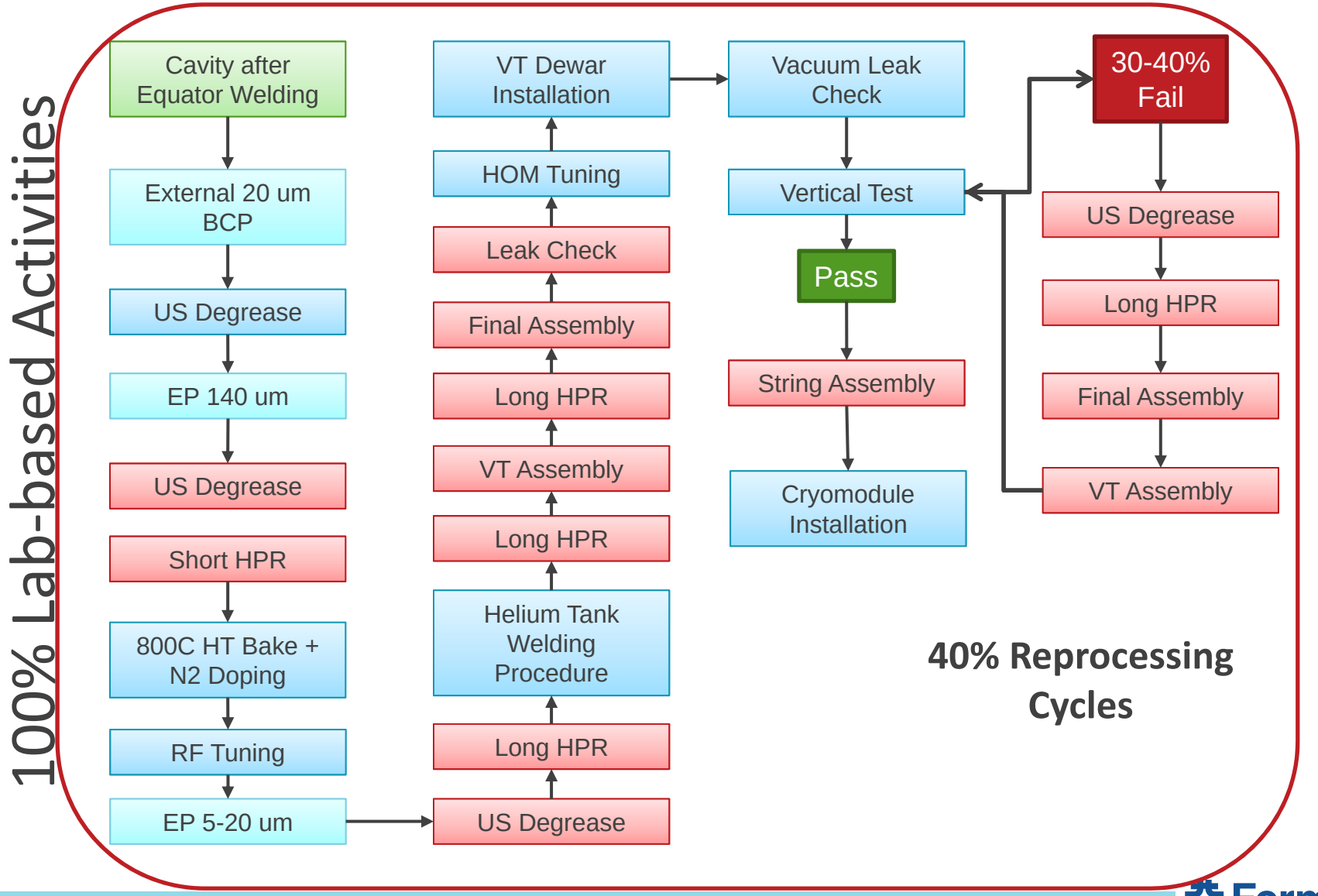

Other Processing and Testing Activities

- SBIRs – cavity fab, processing R&D
- Work for others—R&D support
- IIFC support
- Materials R&D
- Instrumentation testing
- Microphonics studies

The current level of support for this work is inadequate and will continue to deteriorate with increasing project demands from LCLS II and PIP II. More resources are necessary to expand this work.

Available Processing Capacity for PIP II

- Remainder of LCLS II High Q0 R&D and design verification phases—through CY2014
  - ~25% of SCSPF capacity to support 650 MHz 1-cell and SSR1 tasks, WFOs, SBIRs, IIFC, other R&D
- 0% PIP II tasks CPL since it isn't compatible with PIP II cavities
- CY2015 most flexible time until CY2018.
- Pre-LCLS II production, however, all prototype CM cavities being prepped at FNAL. SCSPF ~50% available during CY2015
- Production Year 1: SCSPF < 50% available with continued 3.9 GHz R&D
- Production Year 2: SCSPF ~10% during 3.9 GHz production and reprocessing of 1.3 GHz, < 50% when 3.9 GHz production completes
- Very limited multi-cell 650 MHz related capabilities at ANL. Details in next slide.
- No dressed 650 MHz or SSR2 capabilities at SCSPF or CPL

07/08/2014 PIP II Processing and Testing Readiness

Step	SSR1	SSR2	650 1-cell	HB 650 Ver1	HB 650 Ver2	HB 650 Dressed	LB 650
US Cleaning	OK	NO	OK	OK	OK?	NO	NO
EP	N/A	N/A	OK	OK?	OK?	N/A	OK?
BCP	OK	NO	OK	NO	NO	NO	NO
HPR	ok/NO!	NO	OK	NO	NO	NO	NO
Support Frames	N/A	NO	OK	NO?	NO	NO	NO
Crates	OK	NO	OK	OK	OK	NO	OK
Clean Assem	OK	NO	OK	NO	NO	NO	NO
Evac/Leak Check	OK	OK	OK	OK	OK	OK	OK
H2 Heat Treatment	OK	NO	OK	NO	NO	N/A	NO
120C Heat Treatment	OK	NO	OK	NO	NO	NO	NO
VTS	OK	NO	OK	NO	NO	NO	NO

Required Processing Infrastructure for PIP II

- Adequate Cleanroom for SSR1,2 and 650 MHz HPR and Assemblies
  - Most R&D and process development can be done at SCSPF
  - Production requires completely new Cleanroom
- Multi-purpose rotational HPR tool for SSR1/SSR2
- Heavy cavity lifter for cleanrooms and RF Lab
- All SSR2 handling tooling
- HT baking support structures
- US tank sized for SSR2, 650 MHz dressed cavities
- Frames, carts, tooling for incomplete cavities (LB650, HB650 Ver2, SSR2, Dressed 650s)
- Optical inspection tooling
- RF Lab tooling

Proc. Facility Operations Effort—minimum to keep online

Table shows minimum staff required to keep facilities operational.
Does not include upgrades, infrastructure modification, etc.
Assume effort is "overhead." Does not include VTS area.

	SCSPF Cleanroom	SCSPF EP/BCP	CPL Cleanroom	CPL EP Area	CPL CBP Area	HT/LT Ovens	Totals
Tech	0.4	0.05	0.4	0.05	0.1	0.15	1.15
Eng/Sci	0.1	0.2	0.1	0.2	0.05	0.25	0.9
Other*	0.05	0.05	0.05	0.05		0.05	0.25
Total FTE	**0.55**	**0.3**	**0.55**	**0.3**	**0.15**	**0.45**	**2.3**

*Other: Procurement, Safety, Admin, etc.

Current Processing Staff

Table shows operational effort when all areas are in full operating mode in current configuration. The totals include operational support from previous table. Effort does not include VTS area support, facility improvement, tooling design, reconfigurations or upgrade efforts.

	SCSPF Cleanroom	SCSPF EP/BCP	CPL Cleanroom	CPL EP Area	CPL CBP Area	HT/LT Ovens	Totals
Tech	2.1	0.15	1.8	0.15	2.0	0.7	6.9
Eng/Sci	0.25	1.25	0.2	0.4	0.05	0.75	2.9
Other*	0.1	0.1	0.1	0.1	0.05	0.1	0.55
Total FTE	**2.45**	**1.5**	**2.1**	**0.65**	**2.1**	**1.55**	**10.35**

Solutions List

- Devote adequate M&S and SWF to the following tasks
  - Cleanroom development and location identification (FNAL preferred)
  - New HPR tool design and procurement
  - Tooling designs and procurement for remaining cavity types
    - Cleanroom
    - Chemistry areas
    - RF Lab
    - Optical Inspection
    - VTS 2&3 Preparations
- Assign chief engineer 100% effort until complete—should happen now.

Conclusions

- Adequate resources must be applied to cavity processing and testing activities to prepare all PIP II cavity types.
- LCLS II will dominate cavity processing and testing efforts and capacity through 2017 especially without additional resources and facility capabilities.
- ANL SCSPF has some flexibility to proceed with PIP II tasks in CY2015 and scattered throughout production in 2016 and 2017.
- CPL at FNAL can handle no PIP II processing tasks.
- PIP II requires an adequately sized and outfitted cleanroom to process the suite of cavities.
- Significant tooling is still needed for PIP II cavity variants now.
- VTS 2&3 insert completion and cavity handling tooling are necessary for PIP II cavity testing.
- Significant dedicated effort is necessary to accomplish designs and facility improvements and development. (minimum 1.5 FTE engineers, 1.5 FTE drafters, + procurement, inspection, etc. support.)

Backup Slides—from Oleg Pronitchev

Requirements for Dressed 650 and SSR1 HPR System

- 1400 mm stroke
- 600 lb capacity
- Different grip heads for SSR1 and Dressed 650
- Rotational wand from vertical to horizontal for SSR1 and SSR2

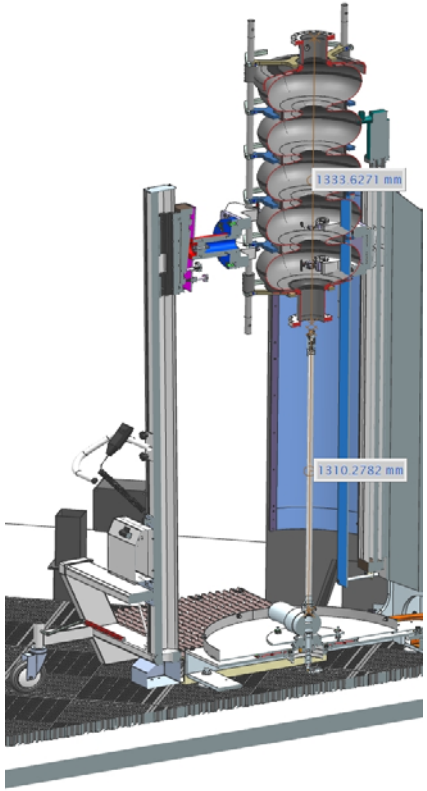

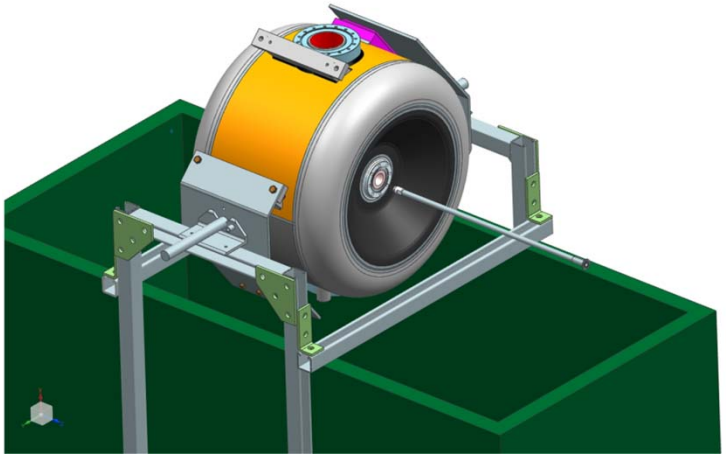

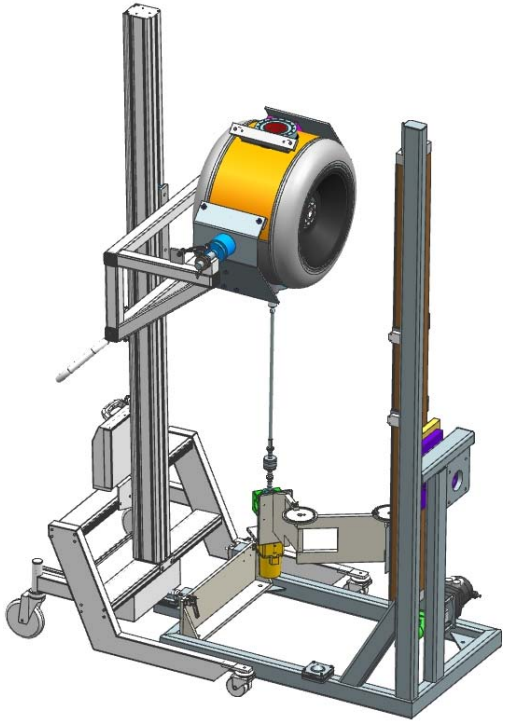

650 MHz Cavity Frames

New frame design requires new HPR tool, grippers, etc. Transitional frame allows HPR tool use as well as other 1.3 GHz sized infrastructure.

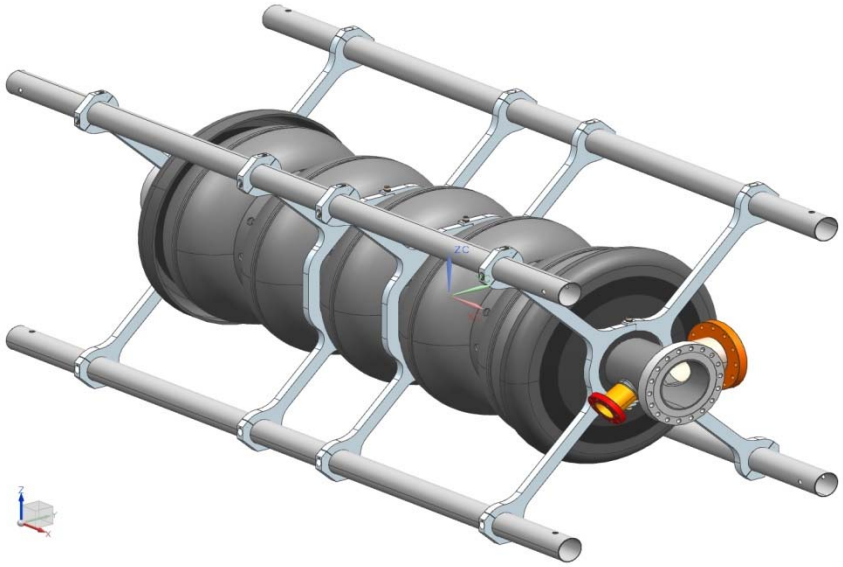

Large Multi-purpose
Fits 650 MHz Dressed Cavities plus all others, including 1.3 GHz.

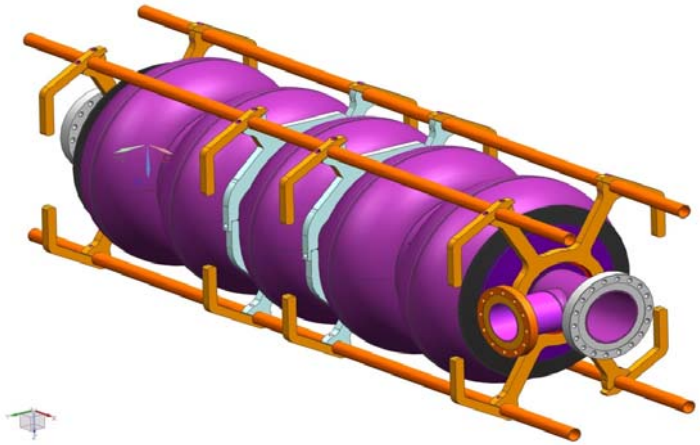

Current Version on-order
Bare HB650 Ver1 only. Fits into HPR tool.

Cavity Mobility Carts

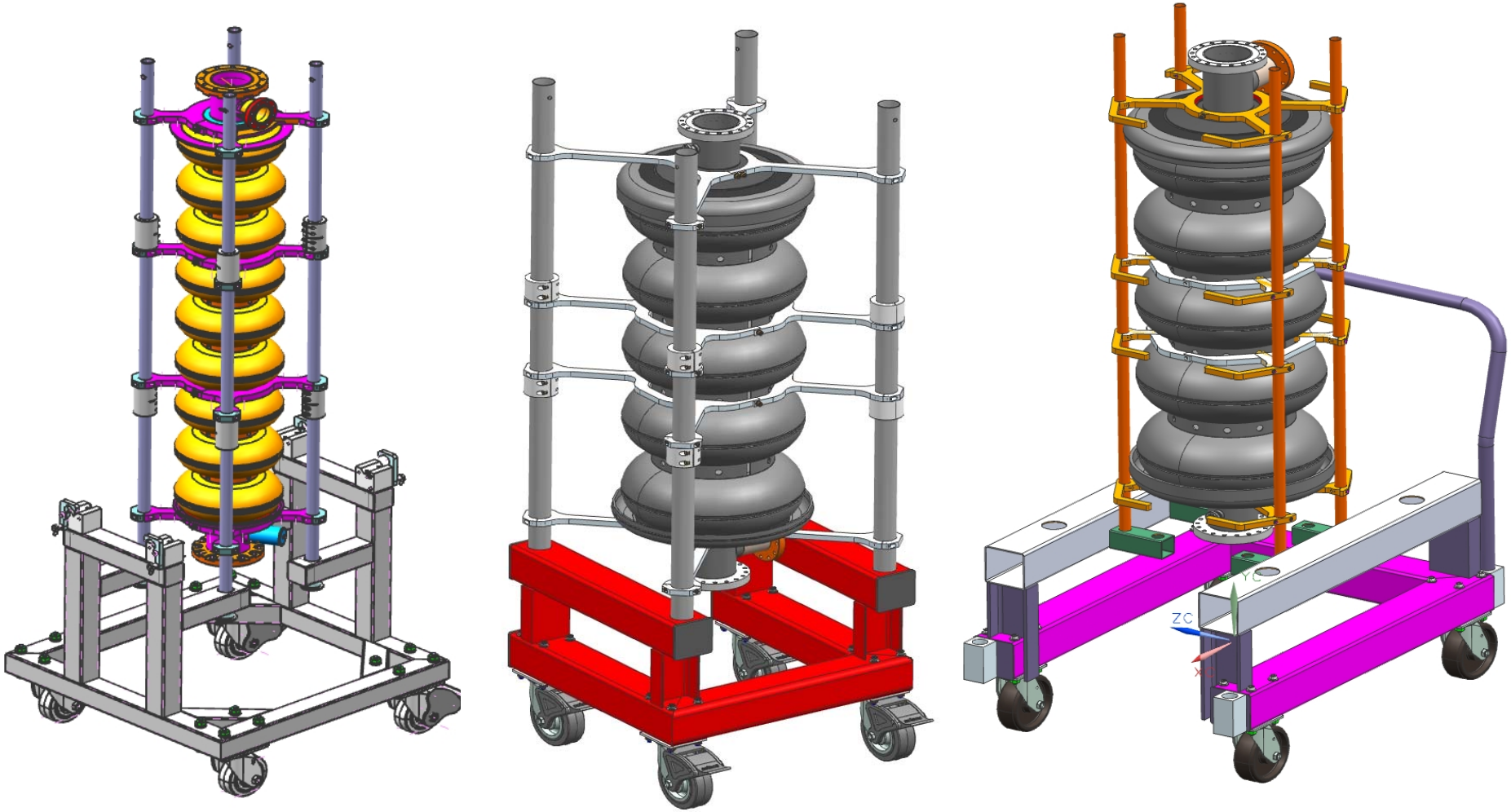

Cleanroom, VTS area, 120C oven area use

Lifting Fixtures

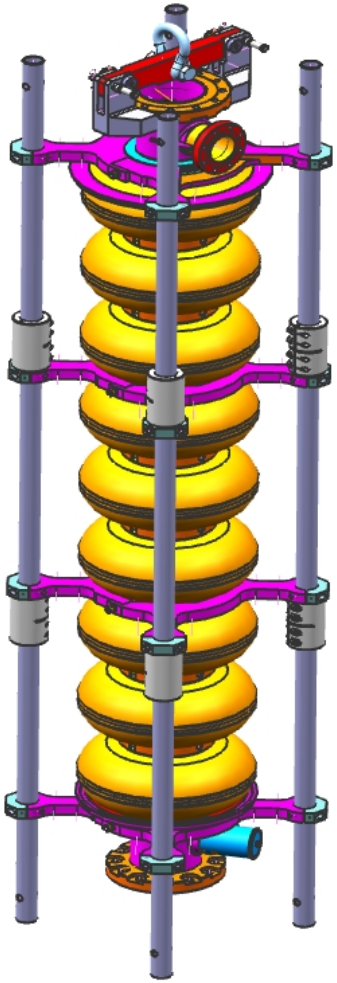

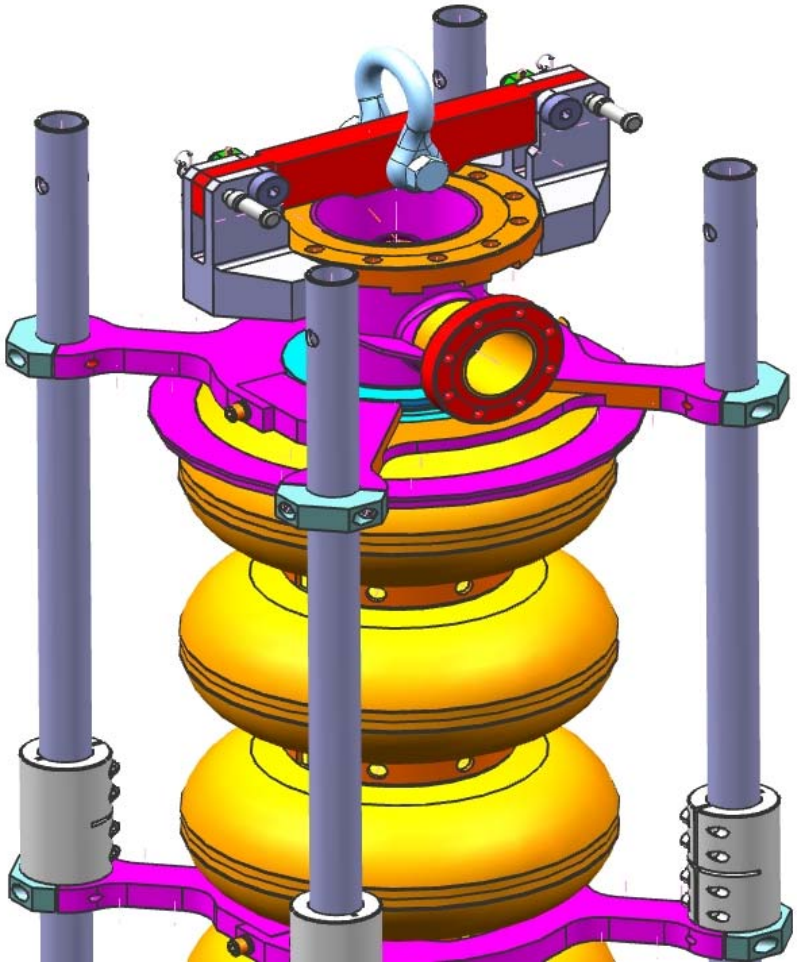

1.3 GHz and 650 MHz currently in use.
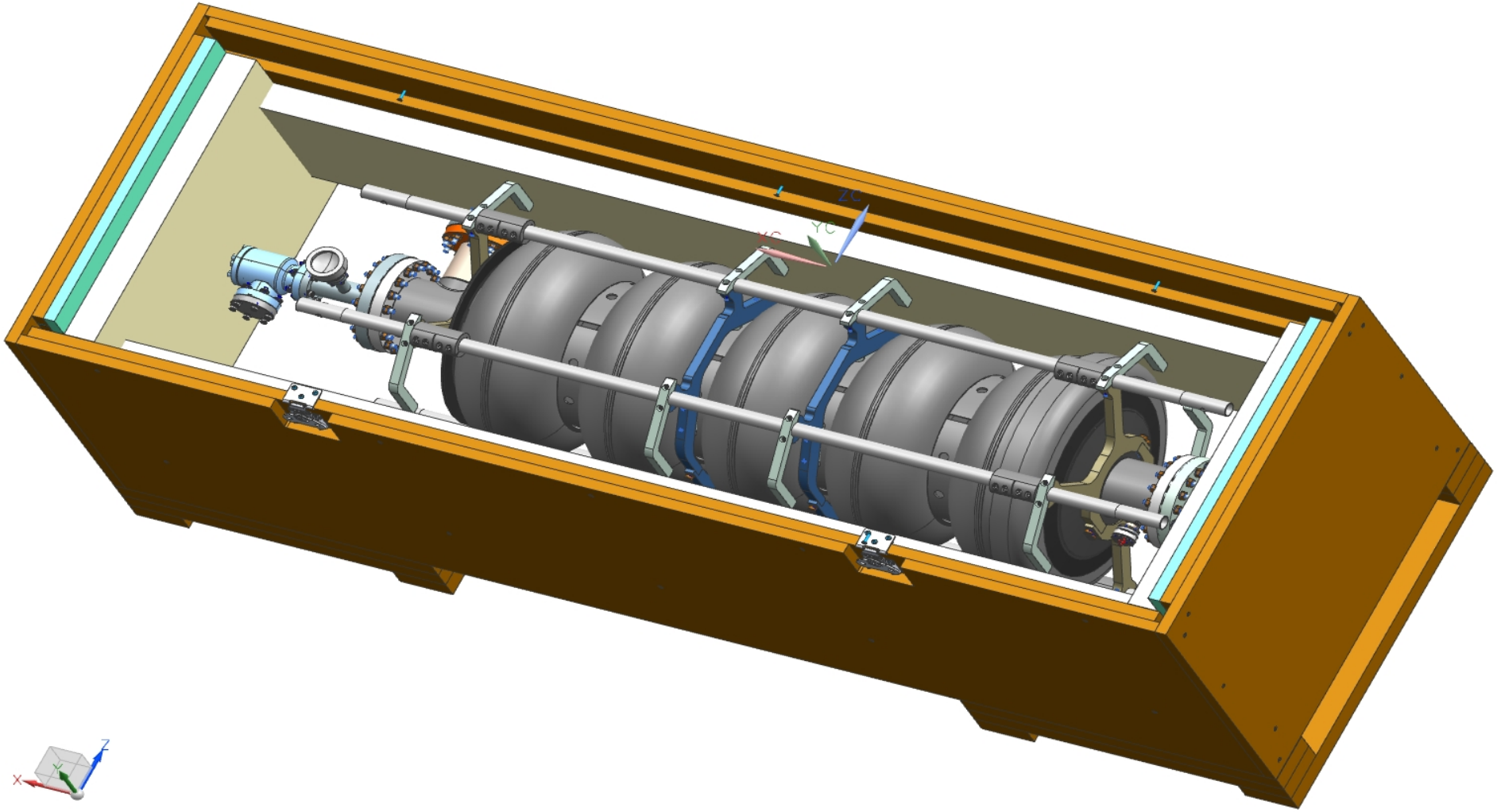
Transport Crates