PXIE LEBT
Status & Plans

Lionel Prost

PIP-II Technical Meeting

February 9th, 2016

Fermilab

Current beam line configuration

- LEBT and RFQ under common vacuum
  - Beam stop inserted & compressed air line locked off
  - Vacuum gate valve closed and ‘locked’ with tie-wraps

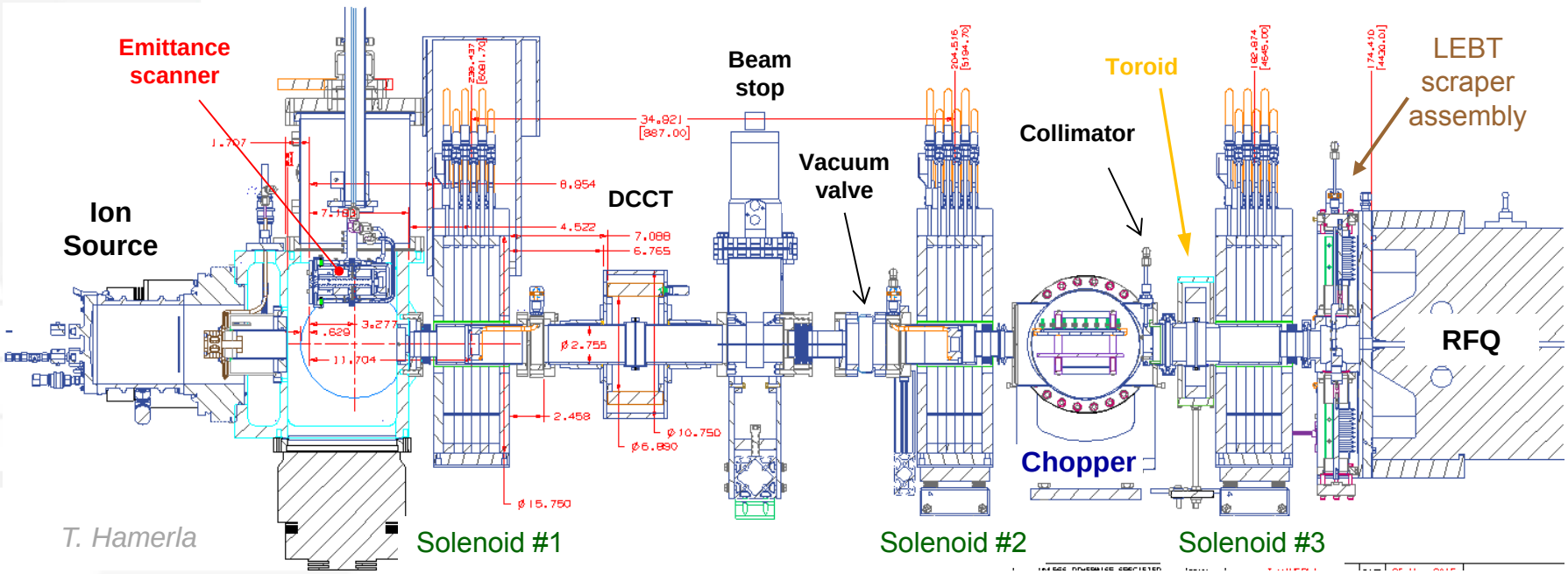

Ion source

- Operational since mid-November
  - Pulsed mode to beam stop
  - Parametric studies
- Ready to commission MPS

Machine Protection System – First step

- Prevent DC beam from reaching RFQ
  - Chopper 'Mode 4' (i.e. DC beam) disabled if LEBT scraper is not covering the RFQ entrance aperture
    - Instead of relying on LVDT read back, mounted position switches on scraper bracket with serial link directly to the MPS
- Protect against chopper failures
  - E.g.: Chopper HV PS off ⇨ DC beam
  - MPS gets a chopper status bit; if faulted, the **IS bias PS** shuts off i.e. cannot generate beam

Not operational yet

Machine Protection System – Second step

- Protect against unexpected changes of the beam going into the RFQ
  - Use LEBT scraper current read back to inform MPS of the beam condition & structure
    - Primary task: if pulse is longer than a given value (e.g.: 20 μs), kicker sends beam to absorber (and possibly IS HV is turned off)
- Need step one complete ***and*** Safety approval of the testing procedure

Concurrent to approval of conditioning the RFQ

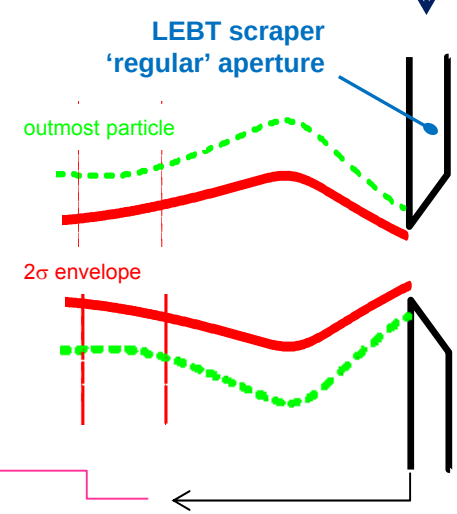

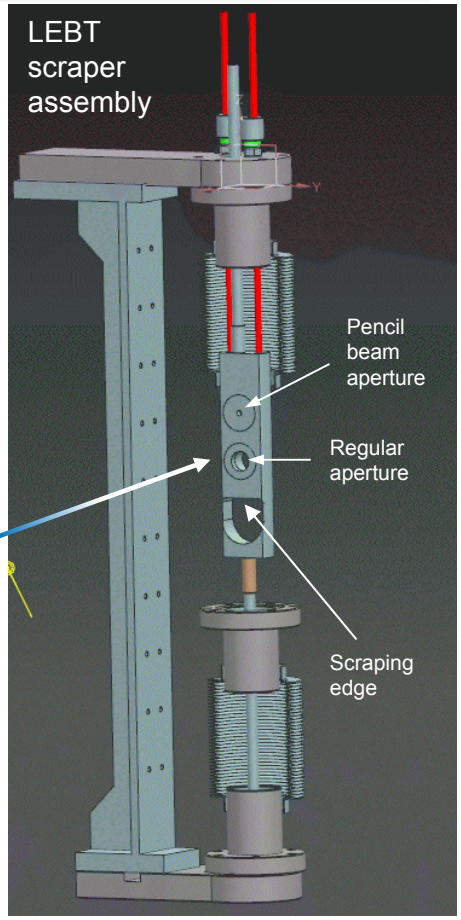

Prepare LEBT for RFQ commissioning

- Once MPS is tested successfully
  - Need to tune the beam so that it goes through the LEBT scraper aperture with the proper size
    - Fine tune MPS and stabilization loop(s)
    - In pulse mode and low duty factor
- Cannot run at the same time as RFQ RF conditioning takes place ⇨ Alternate shifts depending on progress of each task

PIP-II

Additional slides

Fermilab

Machine Protection System (MPS)

- Need to ensure pulse length ≤ 20 μs (and 5 mA max peak current)
  - Faraday cup is the limitation for MEBT 1.1 commissioning
  - First, inhibit beam based on LEBT scraper loss/pulse length
    - Then use pickup ring signal (at 162 MHz) as main device
  - Start with smallest LEBT scraper aperture (3.5-mm diameter vs. 9-mm)

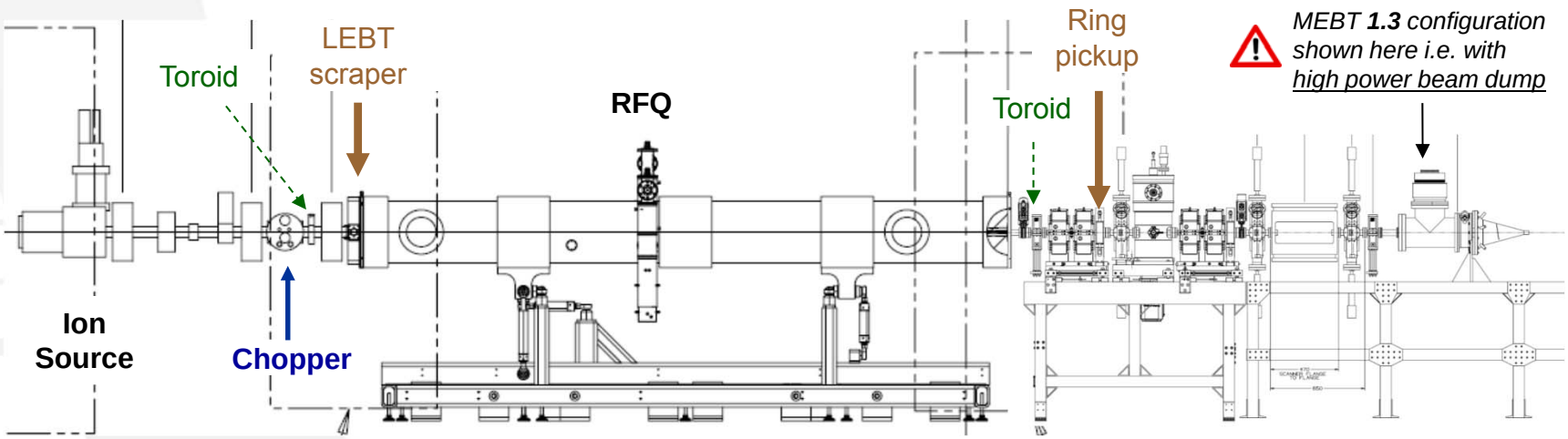

Preliminary implementation (*before shutdown*)

A. Warner,
B. Brooker,
T. Zuchnik

- Beam loss signal from LEBT scraper
  - 3 different windows of integration
  - Remove permit to chopper if above limit
    - Beam deflected to LEBT absorber
  - "Pulse length limit" trip condition not tried yet

Tested successfully but not operational

- Beam stop status signal (from PLC vacuum)
  - IS HV is tripped off if beam stop is inserted into the beam line

Operational

General purpose FPGA Board
- 64 inputs expandable to 162
- 32 outputs
- 405 MHz max for registered logic